TC-FX310 /FX311

SERVICE MANUAL

US Model
Canadian Model
AEP Model
UK Model
E Model

'Dolby' and the double-D symbol are the trade marks of Dolby Laboratories Licensing Corporation. Noise reduction system manufactured under license from Dolby Laboratories Licensing Corporation.

SPECIFICATIONS

Recording system 4-track 2-channel stereo
Fast-forward and rewind time
Approx. 100 sec. (with C-60 cassette)
Bias frequency 105 kHz
Signal-to-noise ratio (NAB, at peak level)

Cassette \ Dolby NR switches	OFF	B-TYPE ON	C-TYPE ON
TYPE IV (Sony METALLIC)	58 dB	65 dB	71 dB
TYPE II (Sony UCX)	56 dB	63 dB	69 dB
TYPE I (Sony BHF)	54 dB	61 dB	67 dB

Total harmonic distortion
1.0% (with Sony METALLIC cassettes)
Frequency response DOLBY NR OFF
- With TYPE IV cassette (Sony METALLIC)
  20 - 17,000 Hz
  30 - 16,000 Hz (±3 dB)
  30 - 13,000 Hz (±3 dB, 0 VU recording)
  30 - 16,000 Hz (DIN)
- With TYPE II cassette (Sony UCX)
  20 - 17,000 Hz
  30 - 15,000 Hz (±3 dB)
  30 - 15,000 Hz (DIN)
- With TYPE I cassette (Sony BHF)
  20 - 16,000 Hz
  30 - 13,000 Hz (DIN)

Wow and flutter 0.05% WRMS (NAB)
±0.14% (DIN)

Inputs
Microphone inputs (phone jacks)
Sensitivity 0.25 mV (−70 dB)
For a low-impedance microphone
Line inputs (phono jacks)
Sensitivity 77.5 mV (−20 dB)
Input impedance 50 k ohms

Outputs
Line outputs (phono jacks)
Output level 0.44 V (−5 dB) at load impedance 50 k ohms
Load impedance over 10 k ohms
Headphone output
Output level −28 dB at a load impedance of 8 ohms

—Continued on page 2—

Tape Transport Mechanism	TCM-130V12

ATTENTION AU COMPOSANT AYANT RAPPORT À LA SÉCURITÉ!

LES COMPOSANTS IDENTIFIÉS PAR UNE TRAME ET UNE MARQUE ⚠ SUR LES DIAGRAMMES SCHÉMATIQUES ET LA LISTE DES PIÈCES SONT CRITIQUES POUR LA SÉCURITÉ DE FONCTIONNEMENT. NE REMPLACER CES COMPOSANTS QUE PAR DES PIÈCES SONY DONT LES NUMÉROS SONT DONNÉS DANS CE MANUEL OU DANS LES SUPPLÉMENTS PUBLIÉS PAR SONY.

SAFETY-RELATED COMPONENT WARNING!!

COMPONENTS IDENTIFIED BY SHADING AND MARK ⚠ ON THE SCHEMATIC DIAGRAMS AND IN THE PARTS LIST ARE CRITICAL TO SAFE OPERATION. REPLACE THESE COMPONENTS WITH SONY PARTS WHOSE PART NUMBERS APPEAR AS SHOWN IN THIS MANUAL OR IN SUPPLEMENTS PUBLISHED BY SONY.

MICROFILM

STEREO CASSETTE DECK

SONY®

TC

General

Power requirements	120 V ac, 60 Hz ... (US, Canadian model) 220 V ac, 50/60 Hz (240 V ac adjustable by authorized Sony personal) ... (AEP, G·AEP model) 240 V ac, 50/60 Hz (220 V ac adjustable by authorized Sony personnel) ... (UK model) 110, 120, 220 or 240 V ac adjustable, 50/60 Hz ... (E model)
Power consumption	13 watts
Dimensions	Approx. 430 x 105 x 275 mm (w/h/d) (17 x 4 1/4 x 10 7/8 inches) including projecting parts and controls
Weight	Approx. 4.2 kg (9 lb 5 oz)

0 dB = 0.775 V

FEATURES

Dolby NR C-type noise reduction system
In addition to the conventional B-type Dolby NR system, this cassette deck employs the newly-developed C-type Dolby NR system which reduces tape noise twice as effective as the B-type system. The C-type system also incorporates an anti-saturation network to improve the high-frequency dynamic range by 4 dB at 10 kHz.

Full-logic "feather-touch" operation
At the slightest touch, the "feather-touch" function buttons enable you to switch directly from one mode to another without going through the stop mode.

Cue and review functions
The cue and review functions help you to locate the desired point on the tape by winding the tape ahead in the fast-forward mode, or rewinding it, with a chattering sound from the recorded part.

Record muting function
The record muting button enables you to automatically make a 4-second blank space between selections.

Auto play
The auto play function makes automatic replay possible promptly after the tape is rewound to the beginning.

Remote control operation (for the TC-FX310 only)
Using the optional RM-50 or RM-80 remote control unit, various operations—recording, playback, record muting operation, etc.—can be remotely controlled.
When the RM-65 synchro remote control unit is used to connect this cassette deck with a turntable equipped with a synchro remote control jack, the operation of the cassette deck and the turntable will be synchronized.

MODEL INDENTIFICATION

– Specification Label –

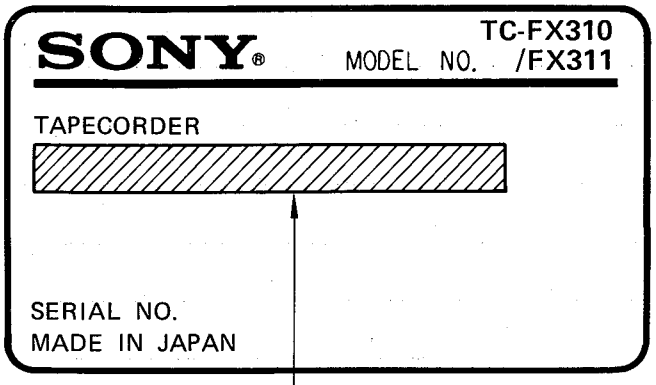

– Power Cord –

E3 model: euro-plug
1-555-734-00

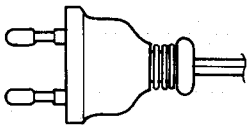

E2 model: parallel-blade plug
1-551-472-23

US, Canadian model:	AC: 120 V 60 Hz 12W
AEP, G·AEP model:	AC: 220 V 50/60 Hz 13W
UK model:	AC: 240 V 50/60 Hz 13W
E model:	AC: 110, 120, 220, 240 V 50/60 Hz 13W

SAFETY CHECK-OUT (US Model)

After correcting the original service problem, perform the following safety check before releasing the set to the customer:
Check the antenna terminals, metal trim, "metallized" knobs, screws, and all other exposed metal parts for AC leakage. Check leakage as described below.

LEAKAGE TEST

The AC leakage from any exposed metal part to earth ground and from all exposed metal parts to any exposed metal part having a return to chassis, must not exceed 0.5 mA (500 microampers). Leakage current can be measured by any one of three methods.

1. A commercial leakage tester, such as the Simpson 229 or RCA WT-540A. Follow the manufacturers' instructions to use these instruments.
2. A battery-operated AC milliammeter. The Data Precision 245 digital multimeter is suitable for this job.
3. Measuring the voltage drop across a resistor by means of a VOM or battery-operated AC voltmeter. The "limit" indication is 0.75 V, so analog meters must have an accurate low-voltage scale. The Simpson 250 and Sanwa SH-63Trd are examples of a passive VOM that is suitable. Nearly all battery operated digital multimeters that have a 2 V AC range are suitable. (See Fig. A)

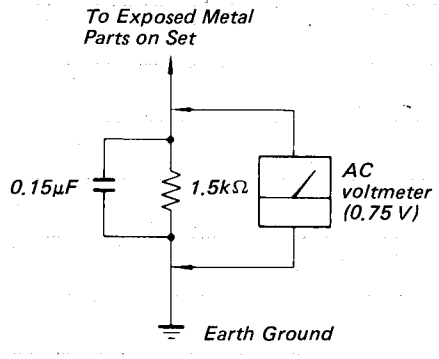

Fig. A. Using an AC voltmeter to check AC leakage.

FUNCTION AND LOCATION OF CONTROLS

Each number in the text on page 5 is keyed to that of the photo and illustration.

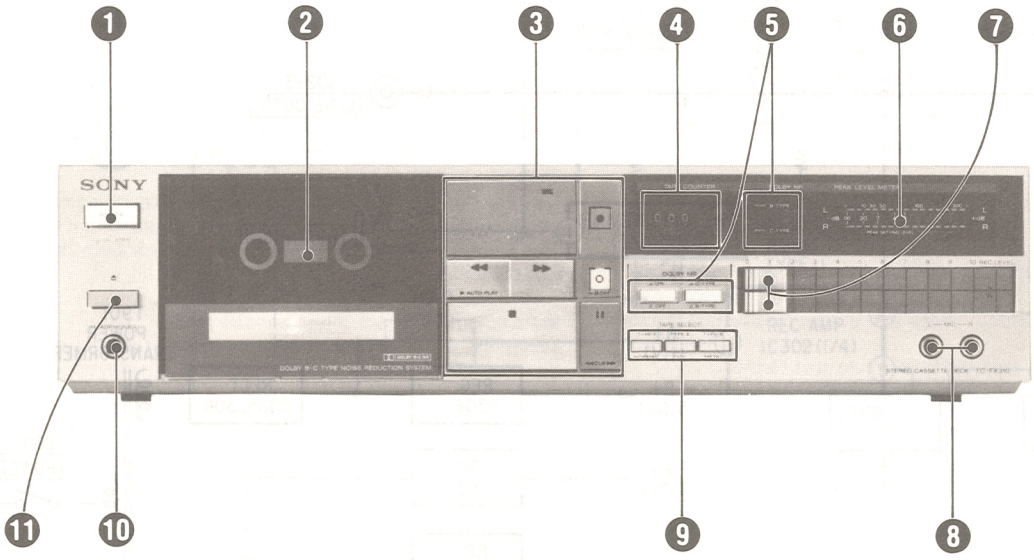

Photo: TC-FX310

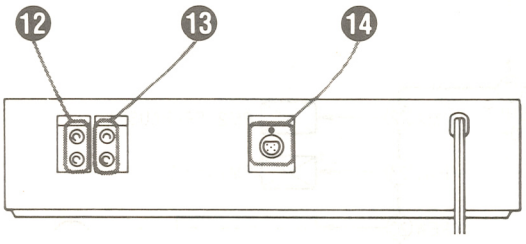

Front panel

❶ POWER switch
This turns the power on or off.

❷ Cassette holder

❸ Function buttons
It is possible to switch directly from one mode to another.

▷ (forward) button : Press this button to play the tape back. To record, press this button while holding the ● button down.
◀◀ (rewind) button : Press this button to rewind the tape.
▶▶ (fast-forward) button : Press this button to advance the tape rapidly.
■ (stop) button : To stop the tape, press this button.
● (record) button : Press this button together with the ▷ button to start recording.
○ (record muting) button : Press this button to eliminate unwanted material and to insert a blank space during recording.
❚❚ (pause) button : To stop the tape running for a moment during recording or playback, press this button. This button is also used to control the start of recording more precisely, to release the record muting mode and for the cue and review functions.

❹ TAPE COUNTER and RESET button
The tape counter provides a numerical reference point while recording which can be used to index a recorded cassette. To reset to zero, press the RESET button.

❺ DOLBY NR switches and indicators
To record or play back using the Dolby NR system, depress the left ON/OFF switch (⎍ ON), then select either the B-type or C-type Dolby NR system with the right switch. Depress the switch for the C-type system (⎍ C-TYPE), or press to release it for the B-type system (⎍ B-TYPE). The corresponding indicator lights up.
To record or play back without the Dolby NR process, press to release the ON/OFF switch (⎍ OFF).

"Dolby" and the double-D symbol are trade marks of the Dolby Laboratories Licensing Corporation. Noise reduction system manufactured under license from Dolby Laboratories Licensing Corporation.

❻ LED PEAK LEVEL METERs
These meters show the peak input level of each channel during recording, and recorded levels in the playback mode. They follow the transient peaks of high-level inputs that are too brief to be followed by conventional VU meters so that the optimum recording level can be accurately set.

❼ REC LEVEL (recording level) controls
These controls adjust the recording level.

❽ MIC jacks (phone jack)
Any low-impedance microphone equipped with a phone plug may be used.

❾ TAPE SELECT buttons
Depress one of the TAPE SELECT buttons, depending on which type of tape you use. The optimum bias current adjustment for recording and the optimum equalization adjustment for both recording and playback are set.

❿ HEADPHONES jack (stereo phone jack)
Connect a pair of headphones either to monitor the input signals to be recorded or to listen to a recording in the playback mode.

⓫ ⏏ (eject) button
Press this button to open the cassette holder.

Rear panel

⓬ LINE IN (line input) jacks (phono jack)
Accepts tape outputs from an amplifier for tape recording and line outputs from another tape deck when duplicating a tape from that unit.

⓭ LINE OUT (line output) jacks (phono jack)
Accepts tape inputs from an amplifier for playing back a tape and line inputs from another tape deck for duplicating a tape onto that unit.

⓮ REMOTE control connector (for the TC-FX310 only)
Connect the optional RM-50 (wired) or RM-80 (wireless) remote control unit to operate the tape transport functions from a distance. The tape deck function buttons are still operative when the remote control unit is connected. The RM-65 synchro remote control unit can be connected to this connector.
Read the instruction manual of your remote control unit before operating.

TC-FX310/FX311

SECTION 1
BLOCK DIAGRAM

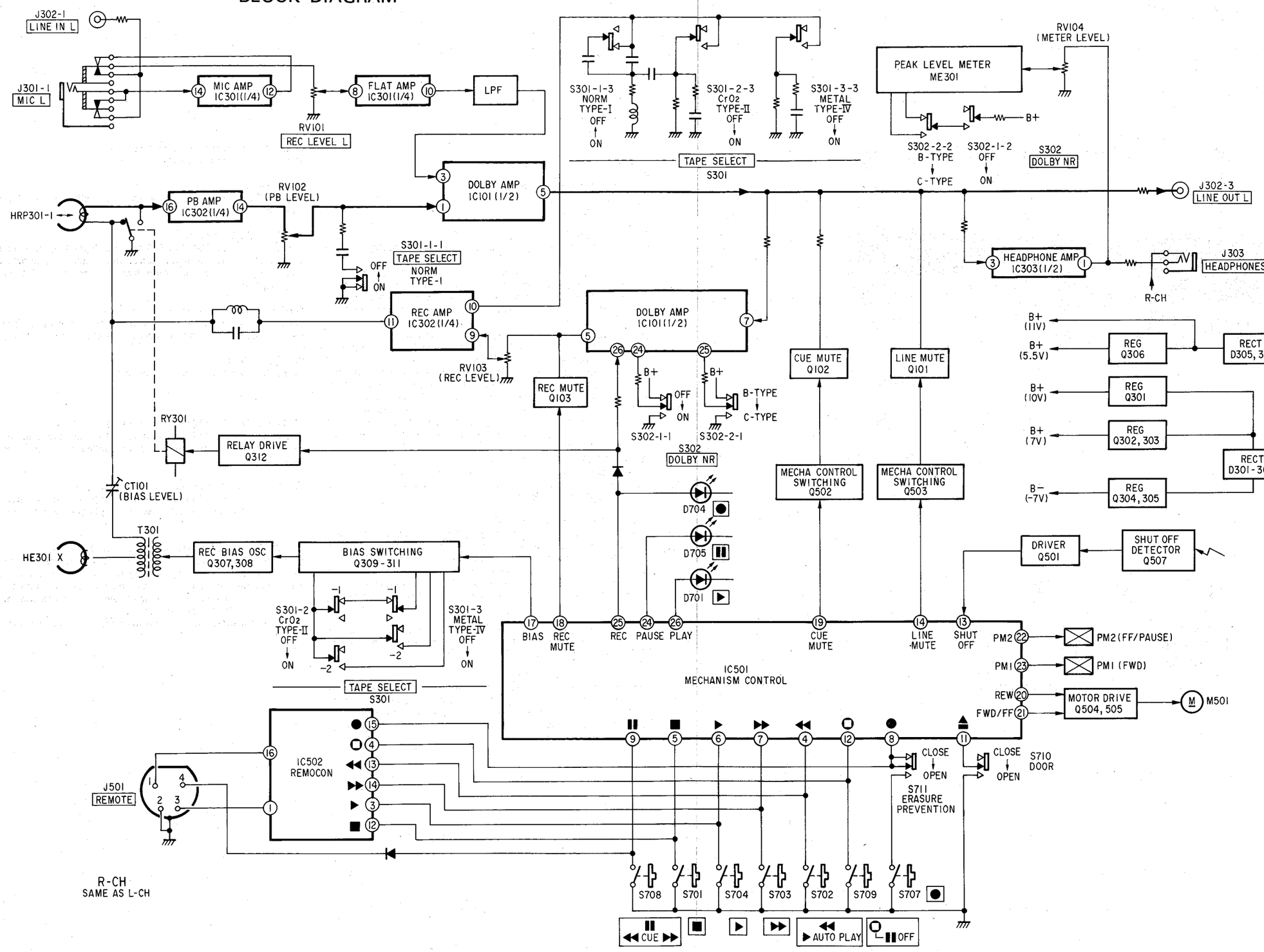

MEMO

SECTION 2
DISASSEMBLY

- Follow the disassembly procedure in the numerical order given.

REMOVE THE TOP COVER AND THE BOTTOM PLATE.

CASSETTE WINDOW/FRONT PANEL

❶ , ❷ cassette window
❶ – ❺ front panel

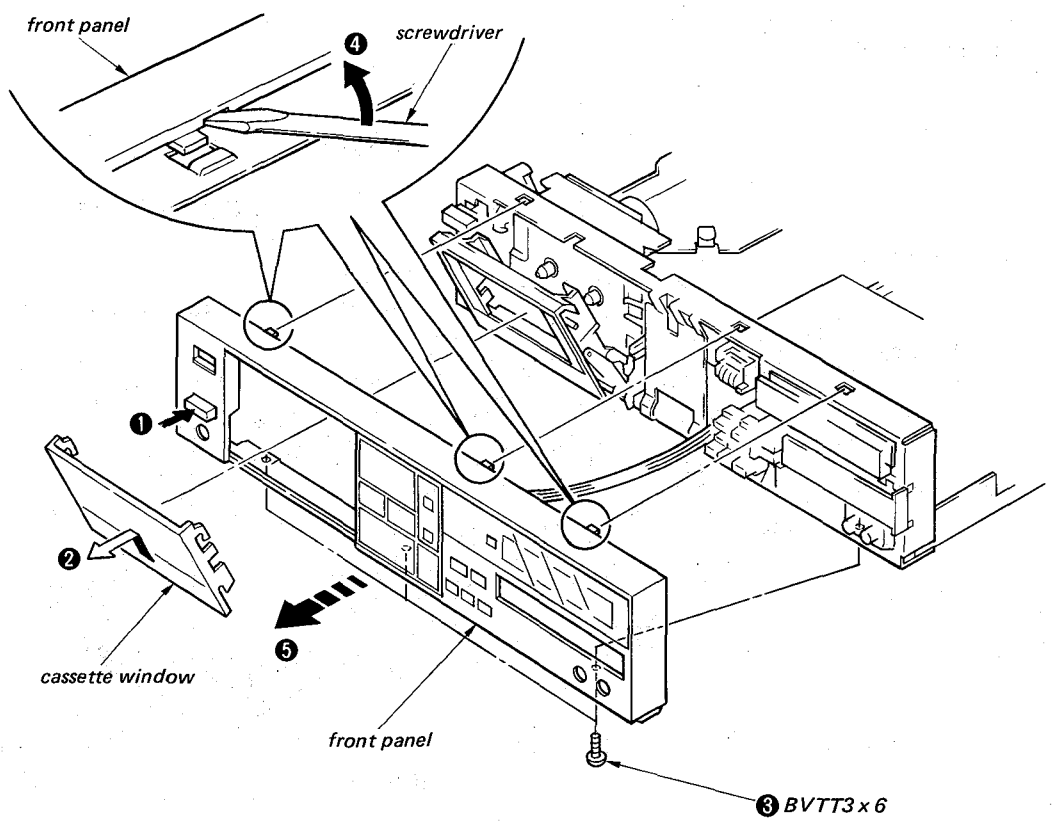

CONTROL SW/FWD, FF, REW, STOP, PAUSE KNOBS

❶ , ❷ control switch board
❸ FWD, FF, REW, STOP, PAUSE knobs

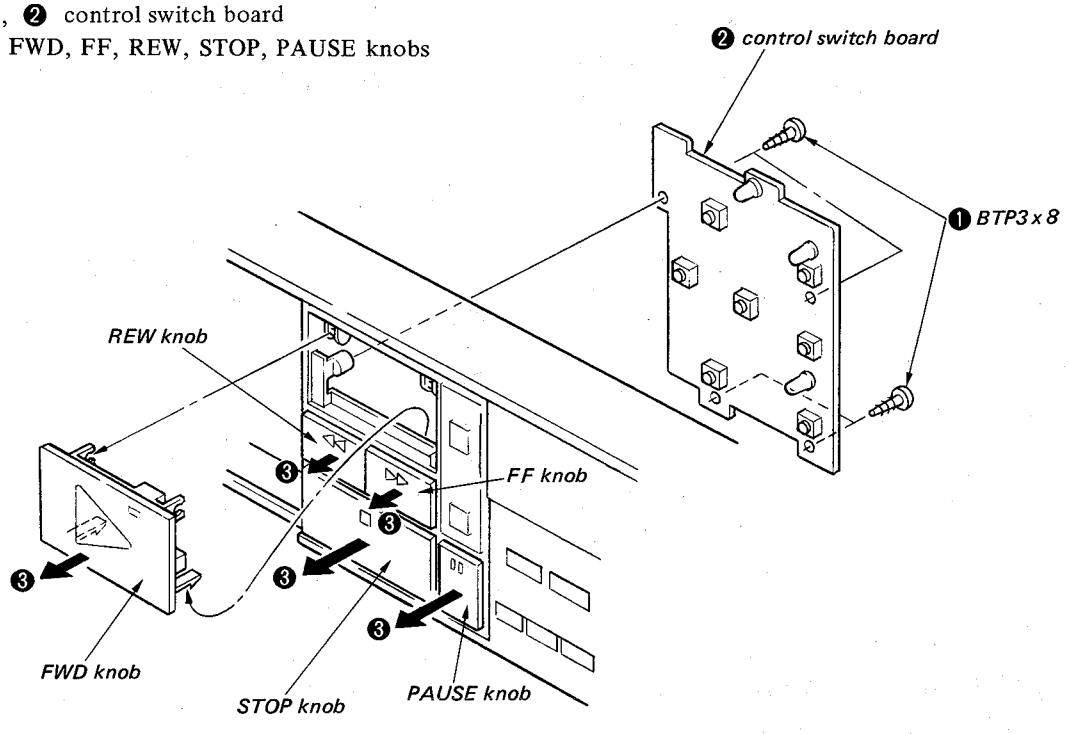

REC VOLUME BOARD

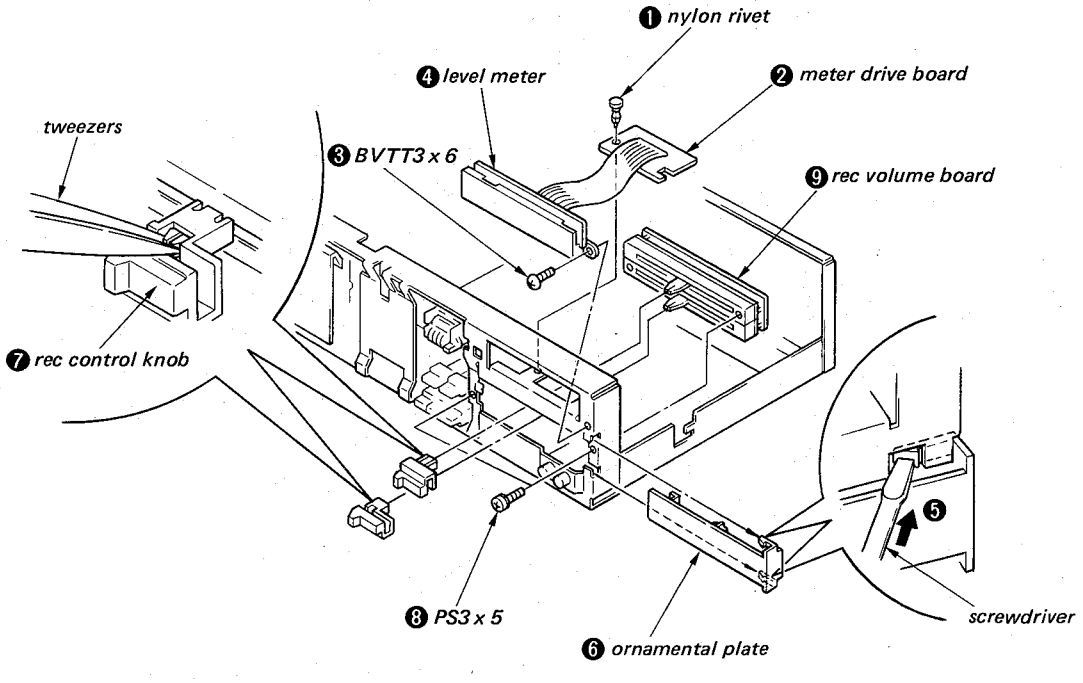

MD/POWER SWITCH

❶ – ❹ MD
❺ – ❼ power switch

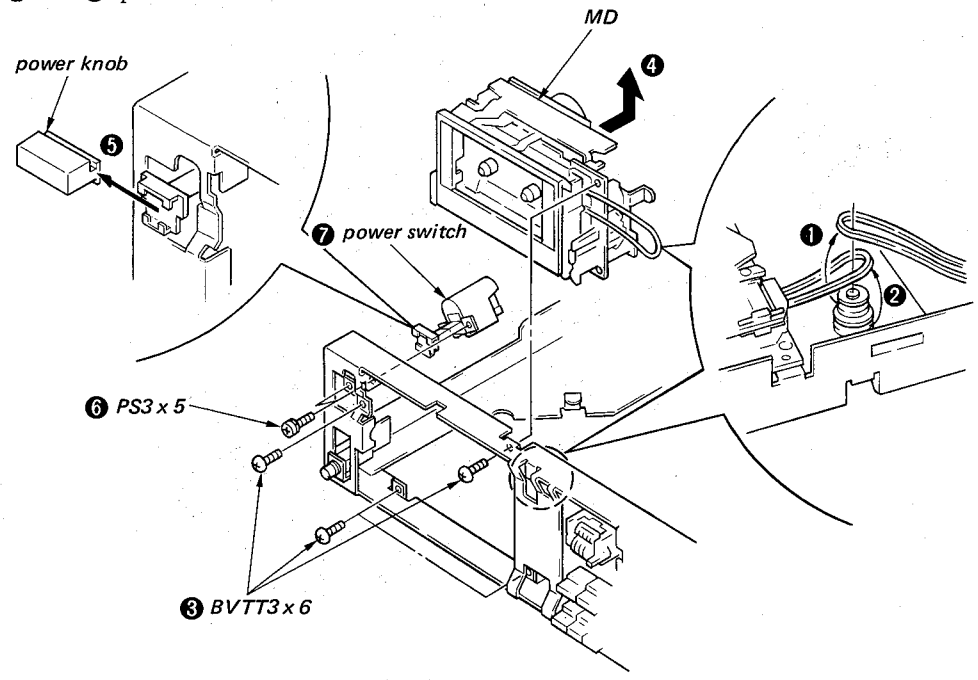

AUDIO BOARD

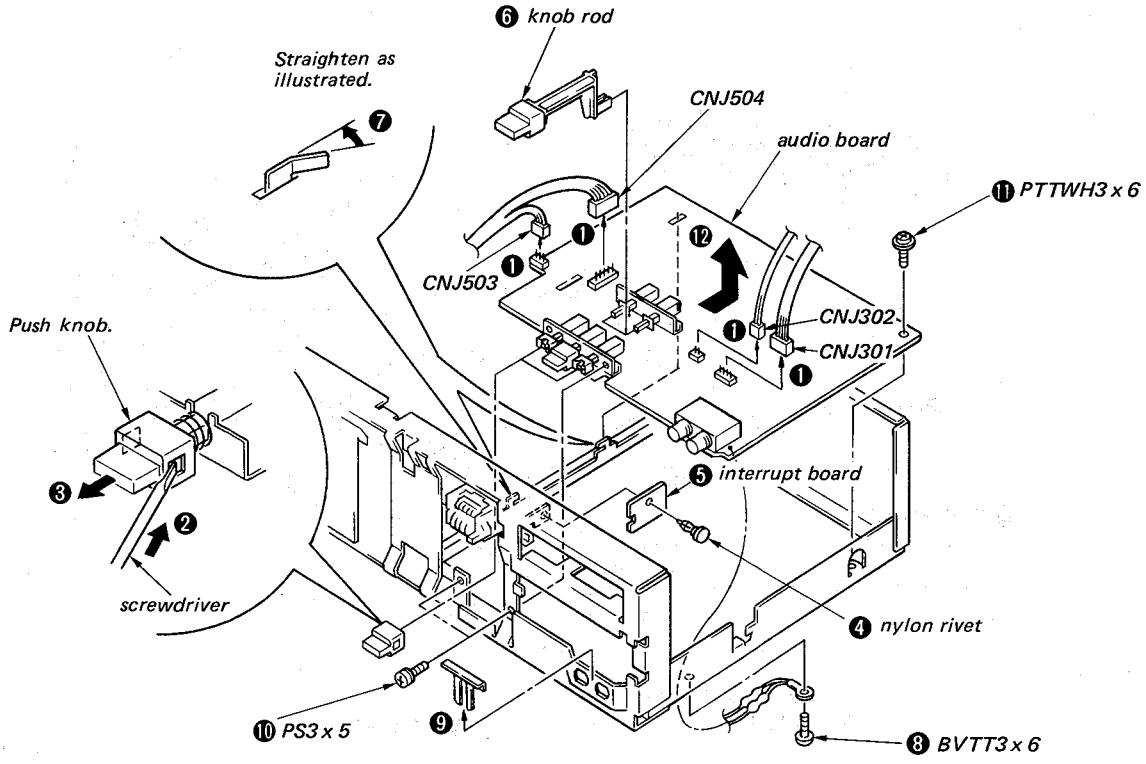

MD ORNAMENTAL PLATE

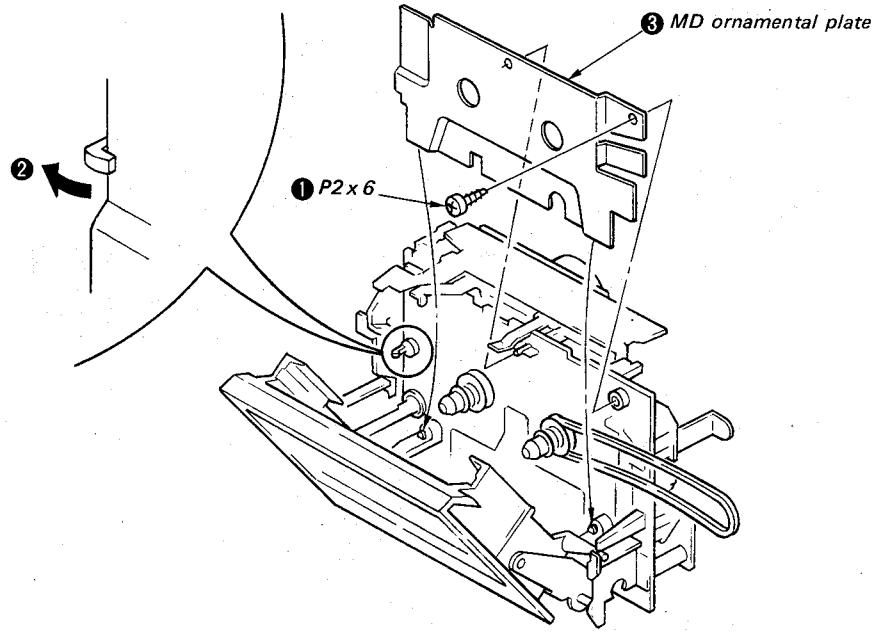

CAPSTAN BELT (R)

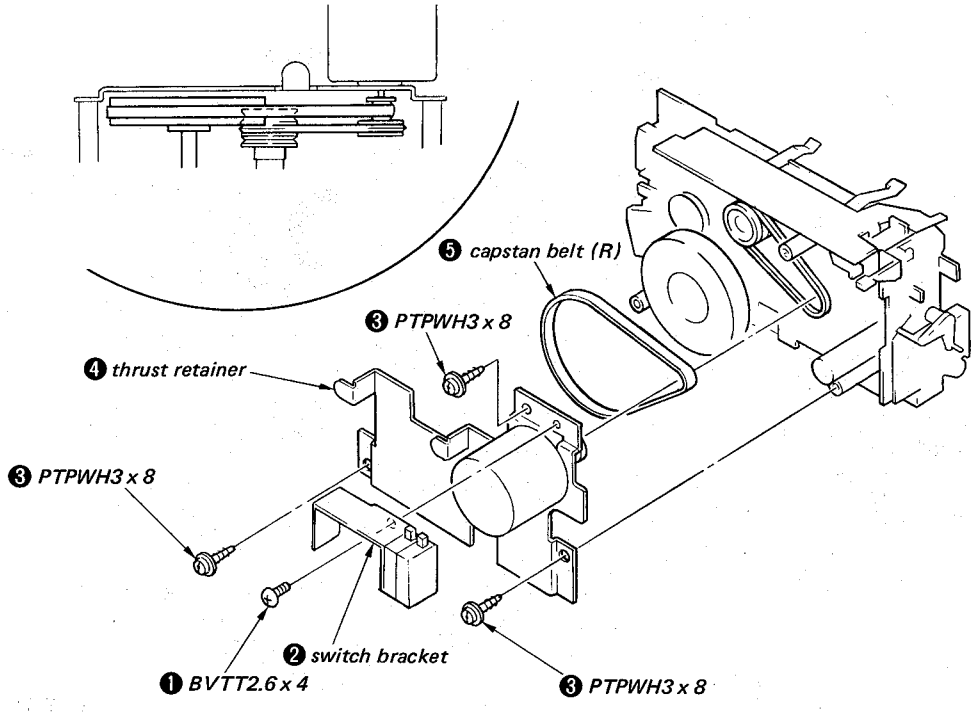

CASSETTE HOLDER

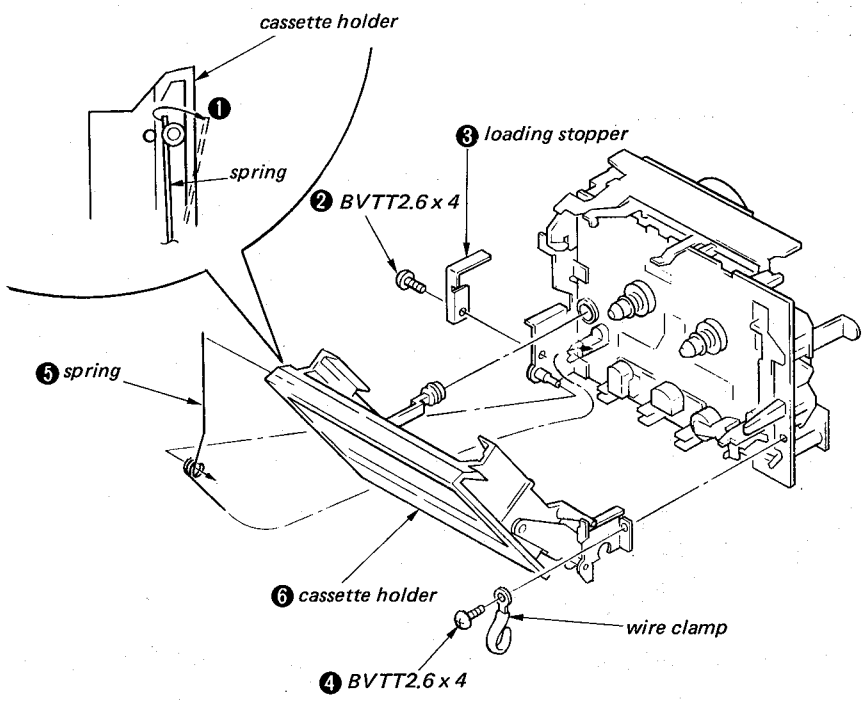

PINCH ROLLER (N)/HEAD

❶ – ❸ pinch roller (N)
❹, ❺ rec/pb head
❻, ❼ erase head

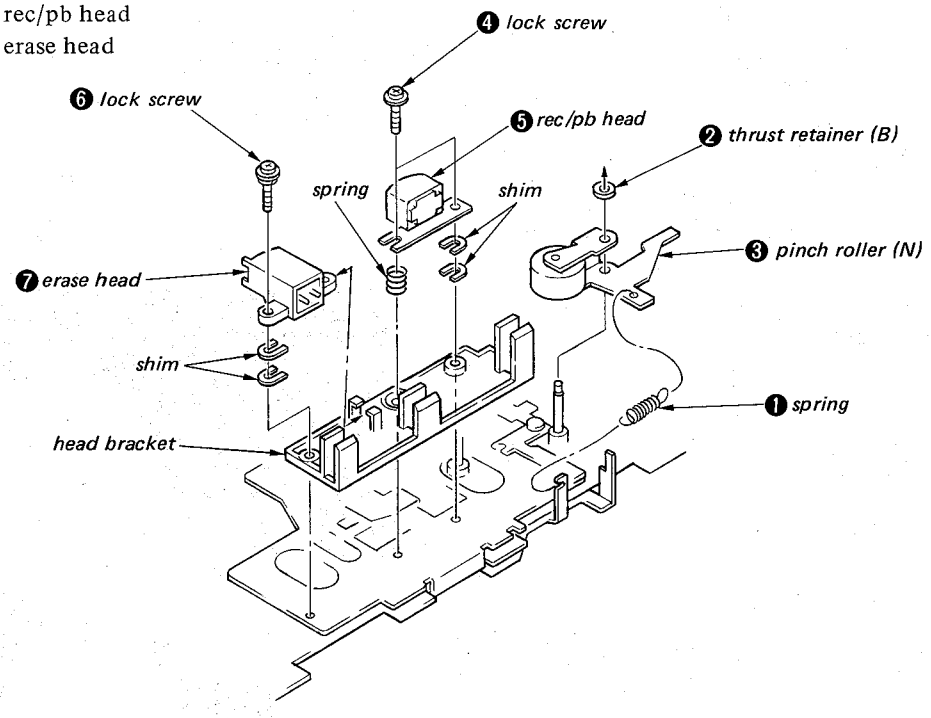

SECTION 3
ADJUSTMENTS

3-1. MECHANICAL ADJUSTMENTS

PRECAUTION

1. Clean the following parts with a denatured-alcohol-moistened swab:

record/playback head	pinch roller
erase head	rubber belts
capstan	idlers

2. Demagnetize the record/playback head with a head demagnetizer.
3. Do not use a magnetized screwdriver for the adjustments.
4. After the adjustments, apply suitable locking compound to the parts adjusted.
5. The adjustments should be performed with the rated power supply voltage unless otherwise noted.

Head Height Adjustment

1. Prepare an adjustment cassette as shown below.

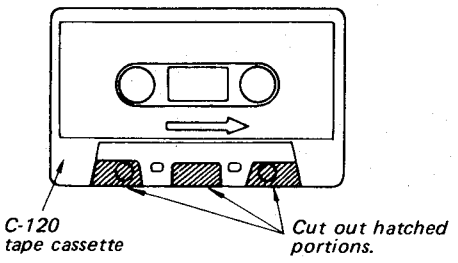

2. In playback mode and viewing from the front, adjust the head heights to eliminate tape curl and tape twist at the portions shown by the arrow.

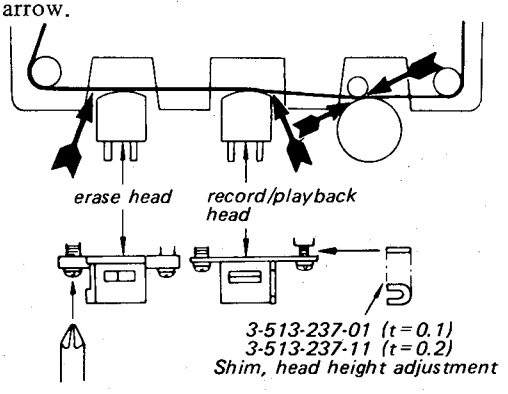

Torque Measurement

Torque	Torque meter	Meter reading
Forward	CQ-102C	28 – 60 g•cm (0.39 – 0.83 oz•inch)
Back Tension	CQ-102C	2.5 – 6 g•cm (0.03 – 0.08 oz•inch)
Fast Forward and Rewind	CQ-201B	80 – 165 g•cm (1.1 – 2.28 oz•inch)

Pinch Roller Pressure Measurement

– Playback Mode –

❷ *Slowly return the pinch roller and read the spring scale just when the pinch roller starts rotating. (The capstan should first contacts here.)*

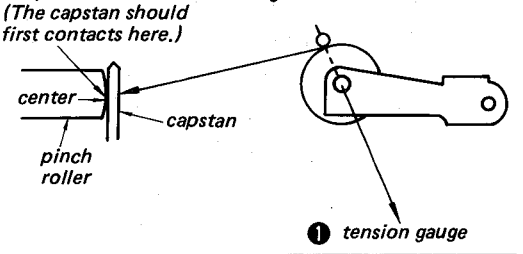

❶ *tension gauge*

200 ~ 300 g•cm
(2.77 ~ 4.16 oz•inch)

Soft Eject Adjustment

Specification

Eject time
0.4 – 1.5 sec.

Set the tape (C-90) and adjust the adjustment screw so that the specified EJECT TIME is obtained.

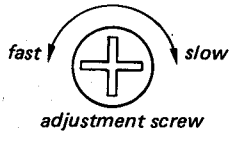

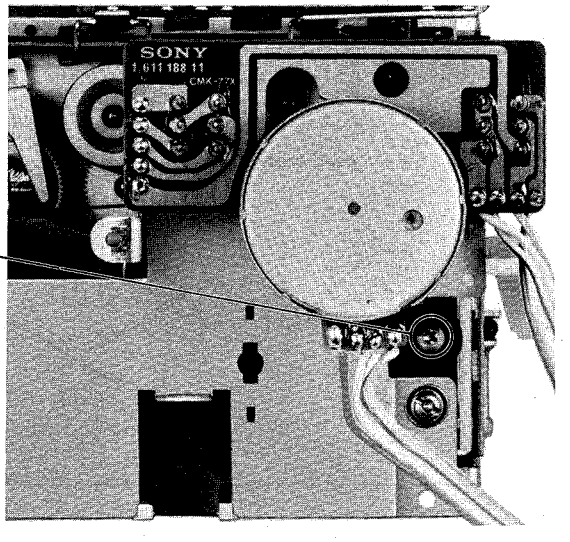

3-2. ELECTRICAL ADJUSTMENTS

Note: The adjustment should be performed in the order given in this service manual. The adjustments should be performed for both L-CH and R-CH.

- Set the TAPE switches according to the tape as follows.

Tape	TAPE SELECT switch
CS-15	TYPE I : NORM
CS-26	TYPE II : CrO_2
CS-42	TYPE IV: METAL

- Switches and controls should be set as follows unless otherwise specified.

DOLBY NR switch: OFF
TAPE switch: TYPE I: NORM

- Standard Record:

Deliver the standard input signal level to the input jack and set the REC LEVEL control to obtain the standard output signal level.

Standard Input Level

	MIC	LINE IN
source impedance	300Ω	10 kΩ
input level	0.77 mV (-60 dB)	0.25 V (-10 dB)

Standard Output Level

	HEADPHONES	LINE OUT
load impedance	8Ω	47 kΩ
output level	31 mV (-28 dB)	0.435 V (-5 dB)

Capstan motor Speed Adjustment

Procedure:

Mode: playback

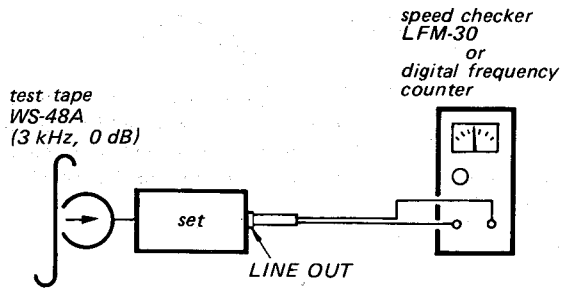

Specification:

Speed checker	Digital frequency counter
-0.5 – +0.5%	2,970 – 3,000 Hz

Frequency difference between the beginning and the end of the tape should be within 0.8% (25 Hz).

Adjustment Location:

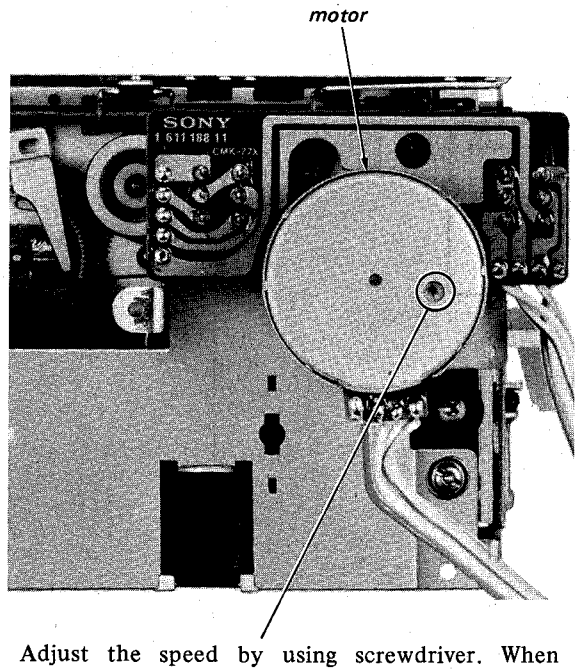

Adjust the speed by using screwdriver. When turning the screw clockwise, speed is faster.

Record/playback Head Azimuth Adjustment

Procedure:

1. Mode: Playback

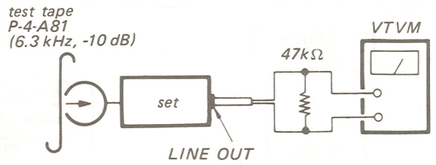

2. Turn the adjustment screw for the maximum output levels. If these levels do not match, turn the adjustment screw until both of output levels match together within 1 dB.

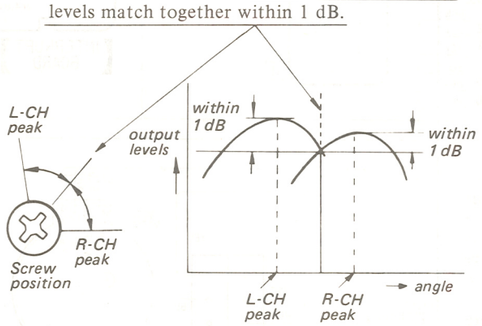

3. Phase Check
   Mode: playback

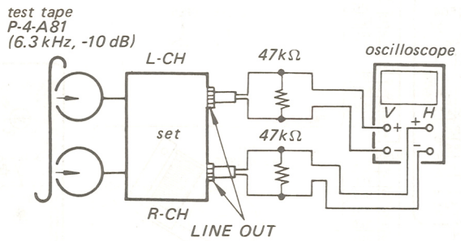

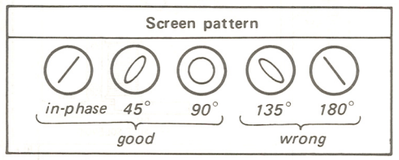

Adjustment Location:

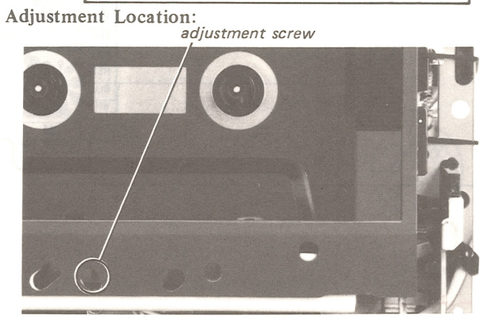

Playback Level Adjustment

Procedure:

Mode: playback

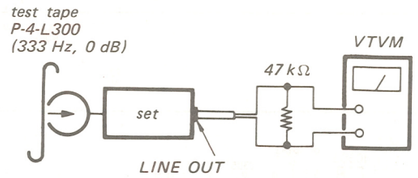

Specification:

LINE OUT level: 0.45 – 0.50 V (-4.9 – -3.9 dB)

Level difference between channels: less than 0.5 dB

Check that the LINE OUT level does not change in playback mode while changing the mode from playback to stop several times.

Adjustment Location:

– AUDIO board –

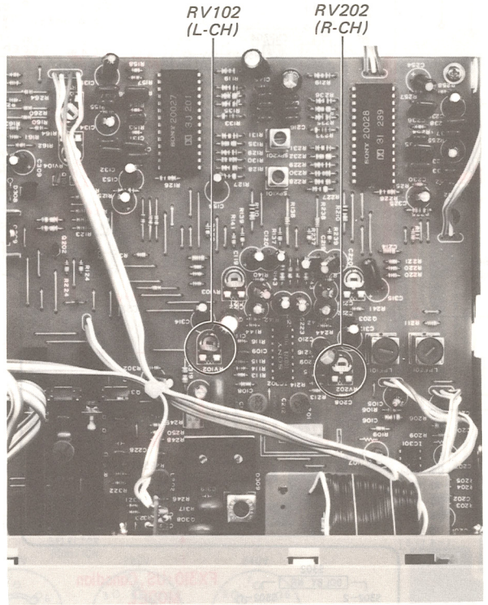

Record Bias Adjustment

Setting:

REC LEVEL control: standard record (See page 15)

Procedure:

1. Mode: record

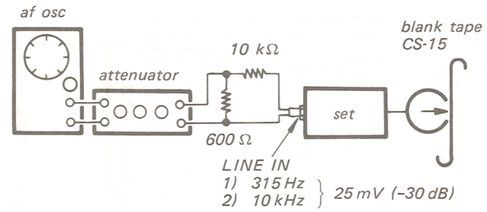

2. Mode: playback

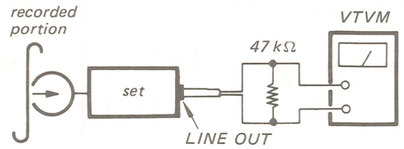

Adjust CT101, CT201 so that the LINE OUT level of 10 kHz signal is 0 dB ±0.5 dB relative to that of 315 Hz.

Adjustment Location:

– AUDIO board –

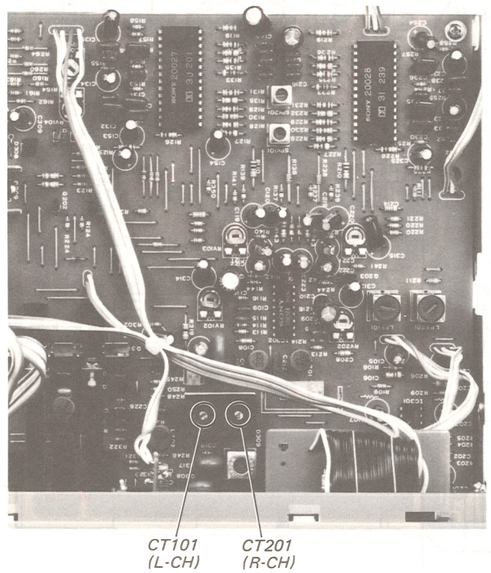

Record Level Adjustment

Setting:

REC LEVEL control: standard record (See page 15)

Procedure:

1. Mode: record

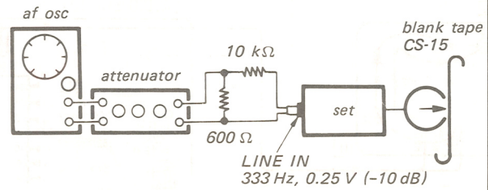

2. Mode: playback

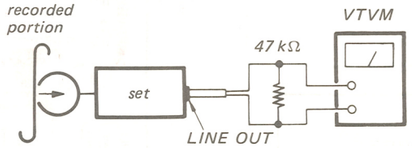

Specification:

LINE OUT level: 0.39 – 0.49 V (-6 – -4 dB)

Adjustment Location:

– AUDIO board –

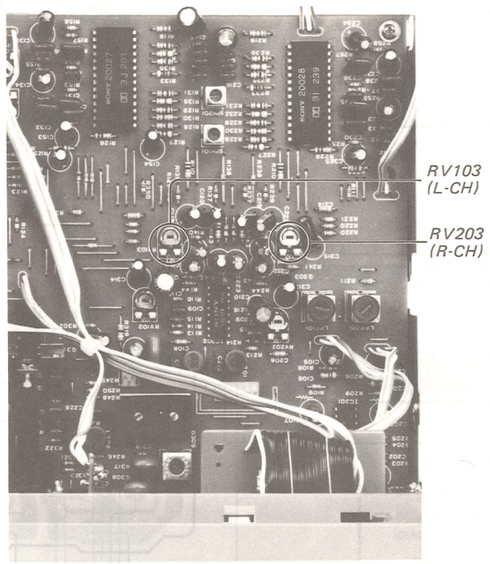

Level Meter Calibration

Procedure:

1. Mode: record

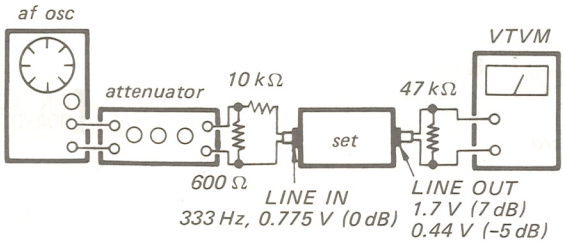

2. Set the REC LEVEL control so that the LINE OUT level is 0.44 V (-5 dB).
3. Adjust RV104 and RV204 so that the 4th segment from the left of the LED meter goes on.
4. Set the REC LEVEL control so that the LINE OUT level is 1.9 V (8 dB). Make sure that all the segments go on.

Note: Slide the REC LEVEL control rightward slowly.

Adjustment Location:

– METER DRIVE board –

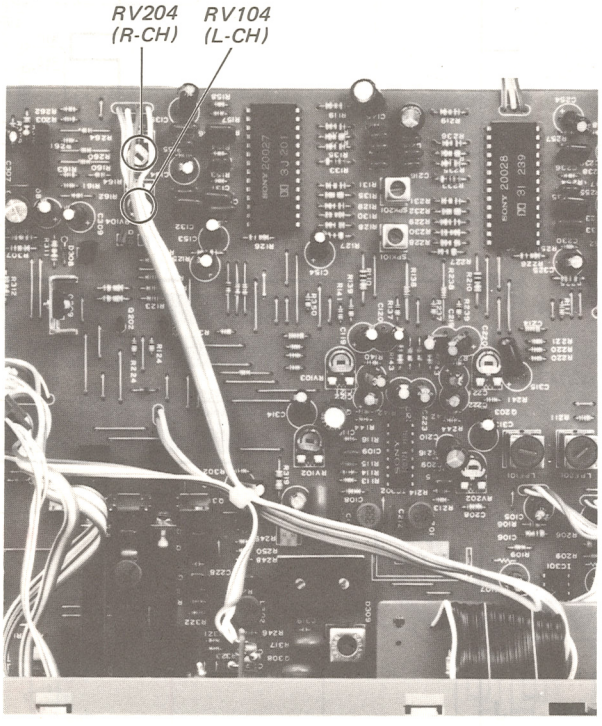

SECTION 4
DIAGRAMS

Circuit Boards Location

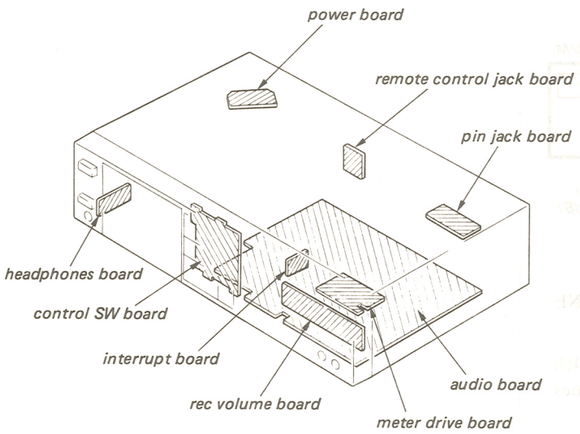

● Semiconductor Lead Layouts

CX10032A CX10033A CX10034 CX20027 CX20028 TC9310N-040 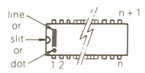	2SA1175 2SC2785 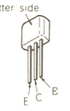	10E-2 1SS202-1 HZ6B1L HZ11B2L RD5.6E-N3
M5218L 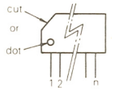	2SC2458 DTA114ES DTC114ES	AA5535S BG5535S PR5535S 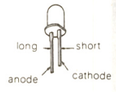
2SC1364 2SC2001	2SB731 2SD414 2SD809 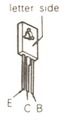	SPI201-20 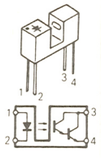

4-1. MOUNTING DIAGRAM

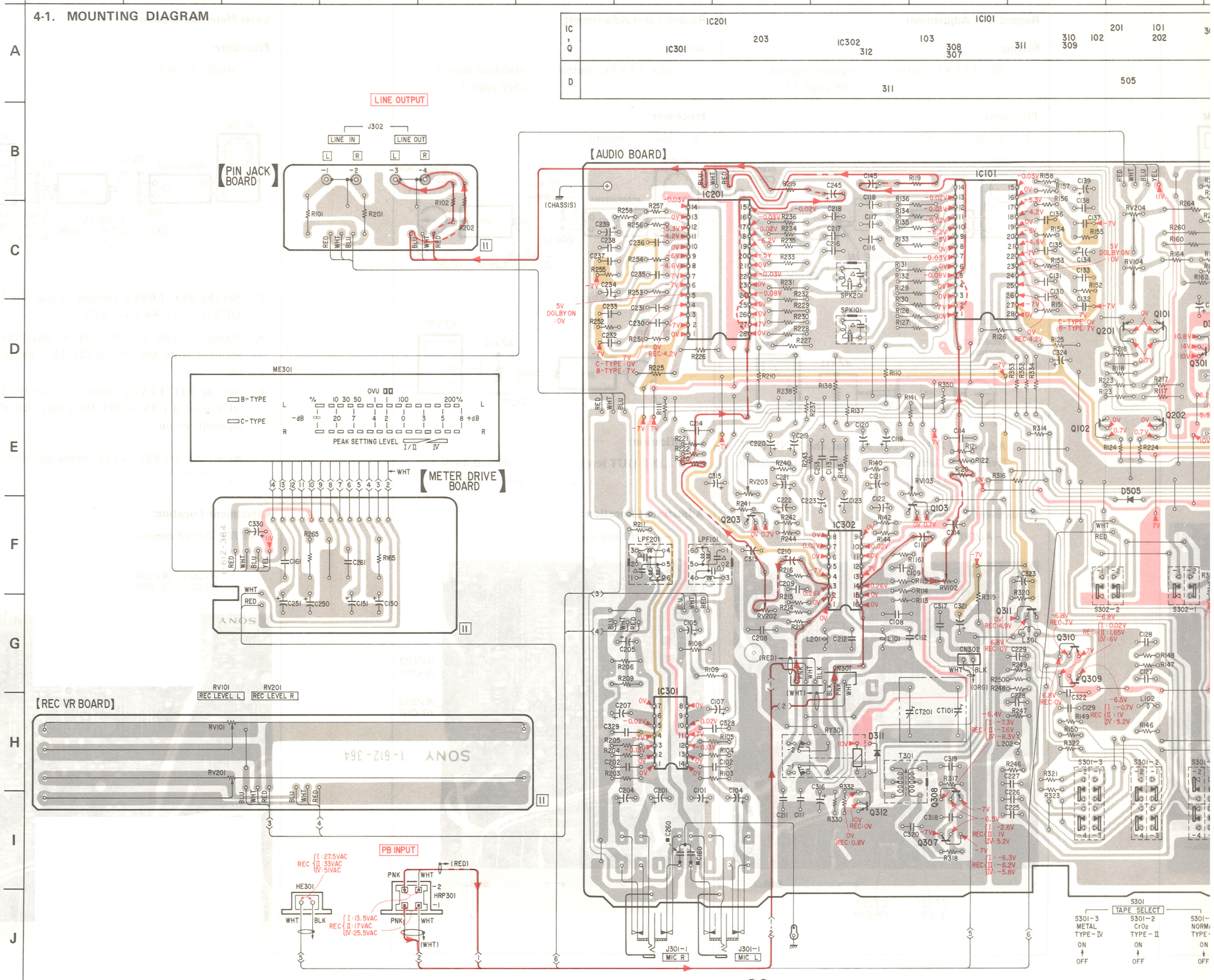

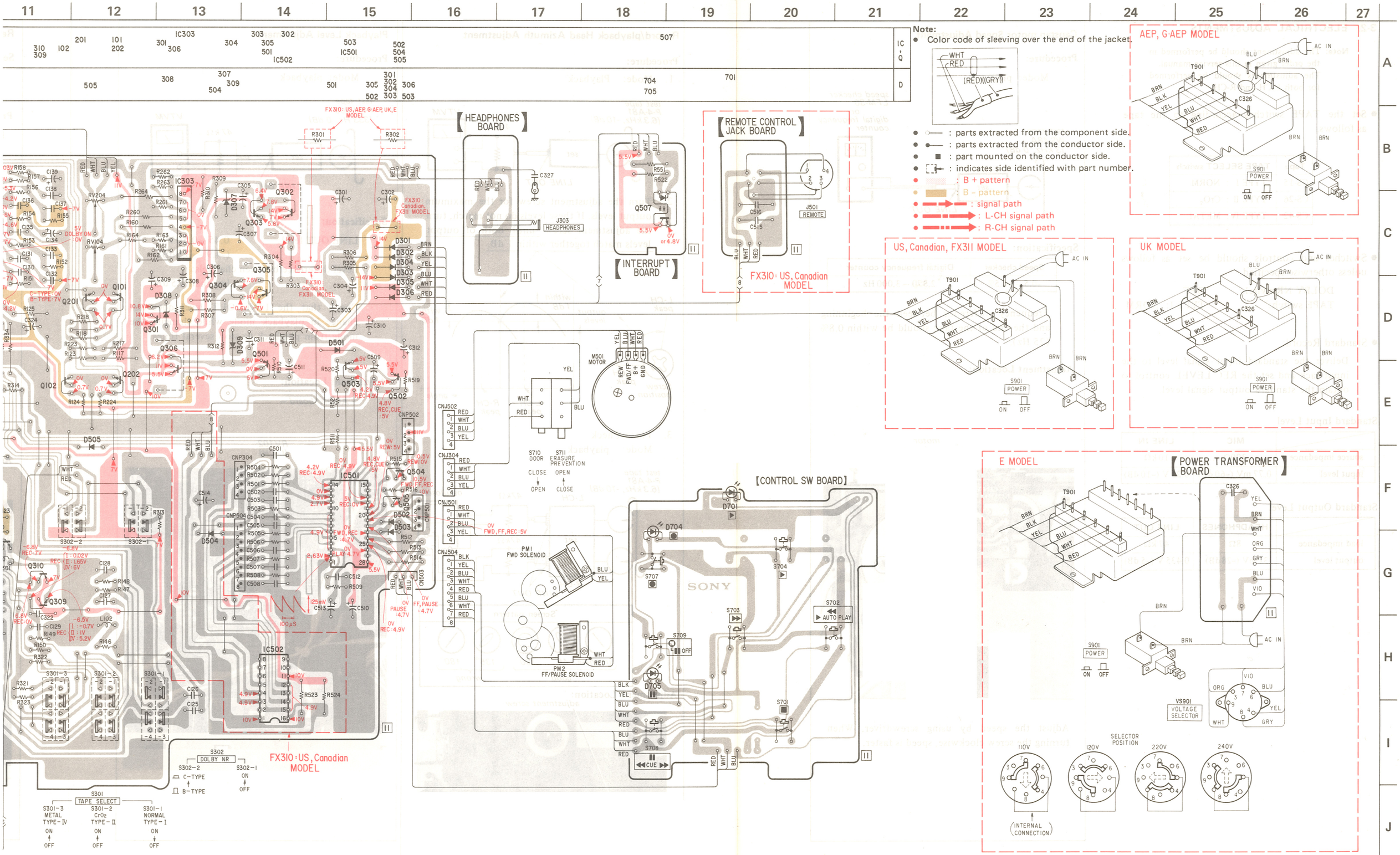
11 12 13 14 15 16 17 18 19 20 21 22 23 24 25 26 27
A B C D E F G H I J
IC Q
D
Note:
Color code of sleeving over the end of the jacket.
WHT
RED
(RED)((GRY))
: parts extracted from the component side.
: parts extracted from the conductor side.
: part mounted on the conductor side.
: indicates side identified with part number.
: B + pattern
: B - pattern
: signal path
: L-CH signal path
: R-CH signal path
AEP, G·AEP MODEL
US, Canadian, FX311 MODEL
UK MODEL
E MODEL
AC IN
T901
C326
S901
POWER
ON
OFF
BRN
BLK
YEL
BLU
WHT
RED
【HEADPHONES BOARD】
J303
HEADPHONES
【INTERRUPT BOARD】
【REMOTE CONTROL JACK BOARD】
J501
REMOTE
FX310: US, Canadian MODEL
FX310: US, AEP, G·AEP, UK, E MODEL
FX310: Canadian, FX311 MODEL
【CONTROL SW BOARD】
M501 MOTOR
REW
FWD/FF
B+
GND
S710 DOOR
S711 ERASURE PREVENTION
CLOSE
OPEN
PM1 FWD SOLENOID
PM2 FF/PAUSE SOLENOID
SONY
AUTO PLAY
CUE
【POWER TRANSFORMER BOARD】
VS901
VOLTAGE SELECTOR
SELECTOR POSITION
110V
120V
220V
240V
(INTERNAL CONNECTION)
S302
DOLBY NR
C-TYPE
B-TYPE
S301
TAPE SELECT
S301-3 METAL TYPE-IV
S301-2 CrO2 TYPE-II
S301-1 NORMAL TYPE-I

4-2. SCHEMATIC DIAGRAM

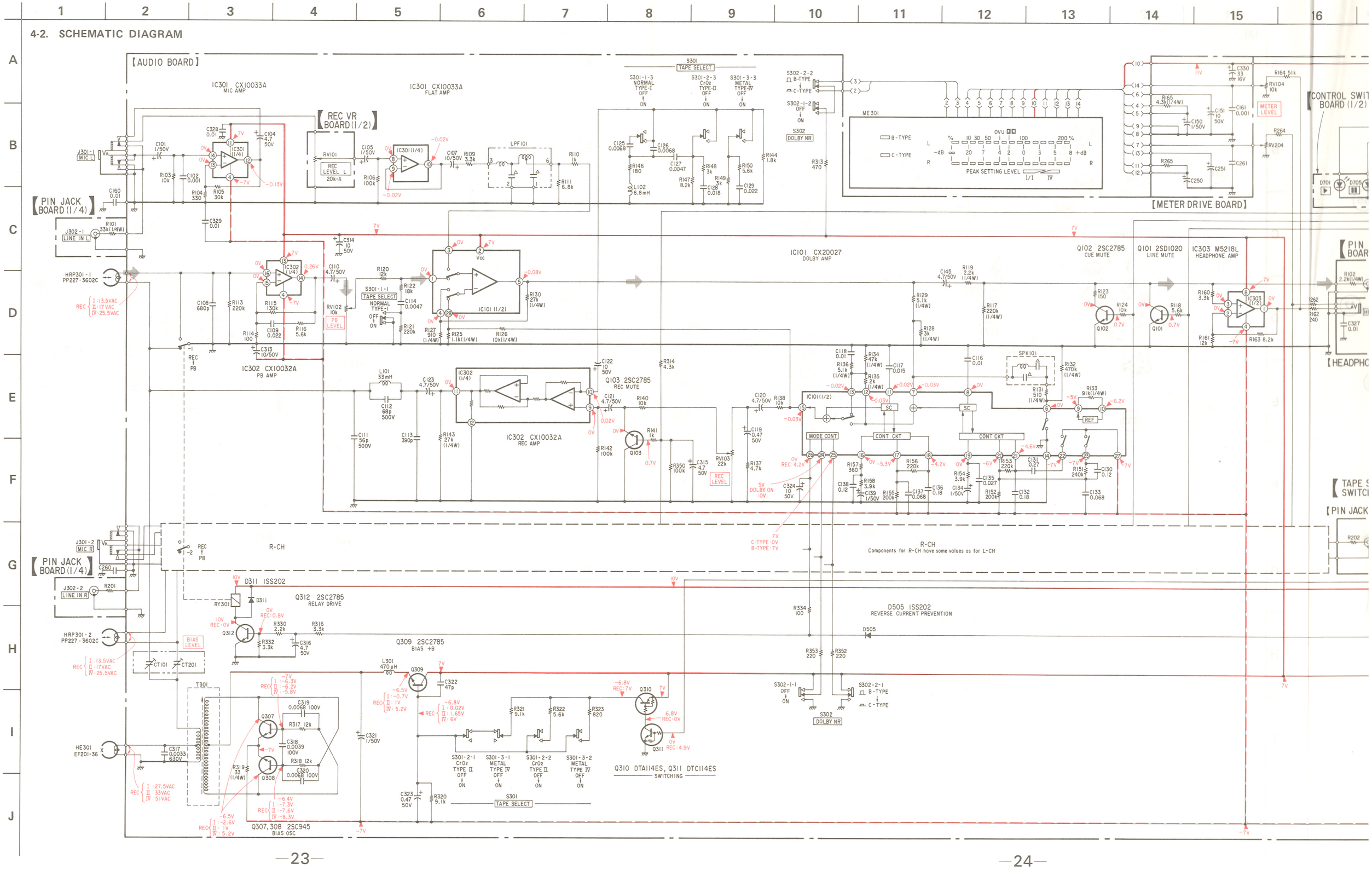

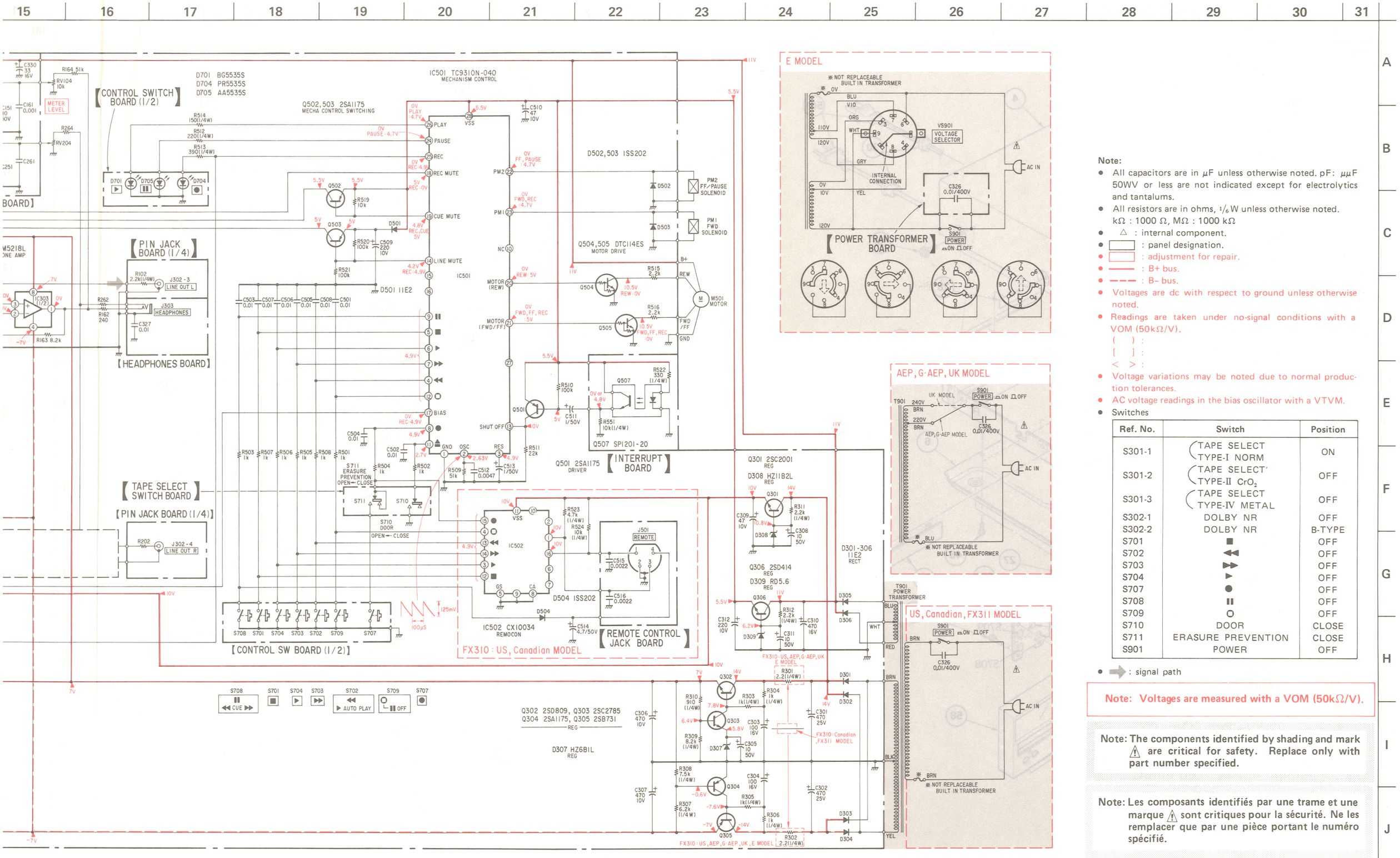

Note:

- All capacitors are in μF unless otherwise noted. pF: μμF 50WV or less are not indicated except for electrolytics and tantalums.
- All resistors are in ohms, 1/6 W unless otherwise noted. kΩ : 1000 Ω, MΩ : 1000 kΩ
- △ : internal component.
- ▭ : panel designation.
- ▭ : adjustment for repair.
- ——— : B+ bus.
- - - - : B- bus.
- Voltages are dc with respect to ground unless otherwise noted.
- Readings are taken under no-signal conditions with a VOM (50kΩ/V).
  ( ) :
  [ ] :
  < > :
- Voltage variations may be noted due to normal production tolerances.
- AC voltage readings in the bias oscillator with a VTVM.
- Switches

Ref. No.	Switch	Position
S301-1	TAPE SELECT TYPE-I NORM	ON
S301-2	TAPE SELECT TYPE-II CrO_2	OFF
S301-3	TAPE SELECT TYPE-IV METAL	OFF
S302-1	DOLBY NR	OFF
S302-2	DOLBY NR	B-TYPE
S701	■	OFF
S702	◀◀	OFF
S703	▶▶	OFF
S704	▶	OFF
S707	●	OFF
S708	❚❚	OFF
S709	○	OFF
S710	DOOR	CLOSE
S711	ERASURE PREVENTION	CLOSE
S901	POWER	OFF

- ➡ : signal path

Note: Voltages are measured with a VOM (50kΩ/V).

Note: The components identified by shading and mark ⚠ are critical for safety. Replace only with part number specified.

Note: Les composants identifiés par une trame et une marque ⚠ sont critiques pour la sécurité. Ne les remplacer que par une pièce portant le numéro spécifié.

SECTION 5
EXPLODED VIEWS AND PARTS LIST

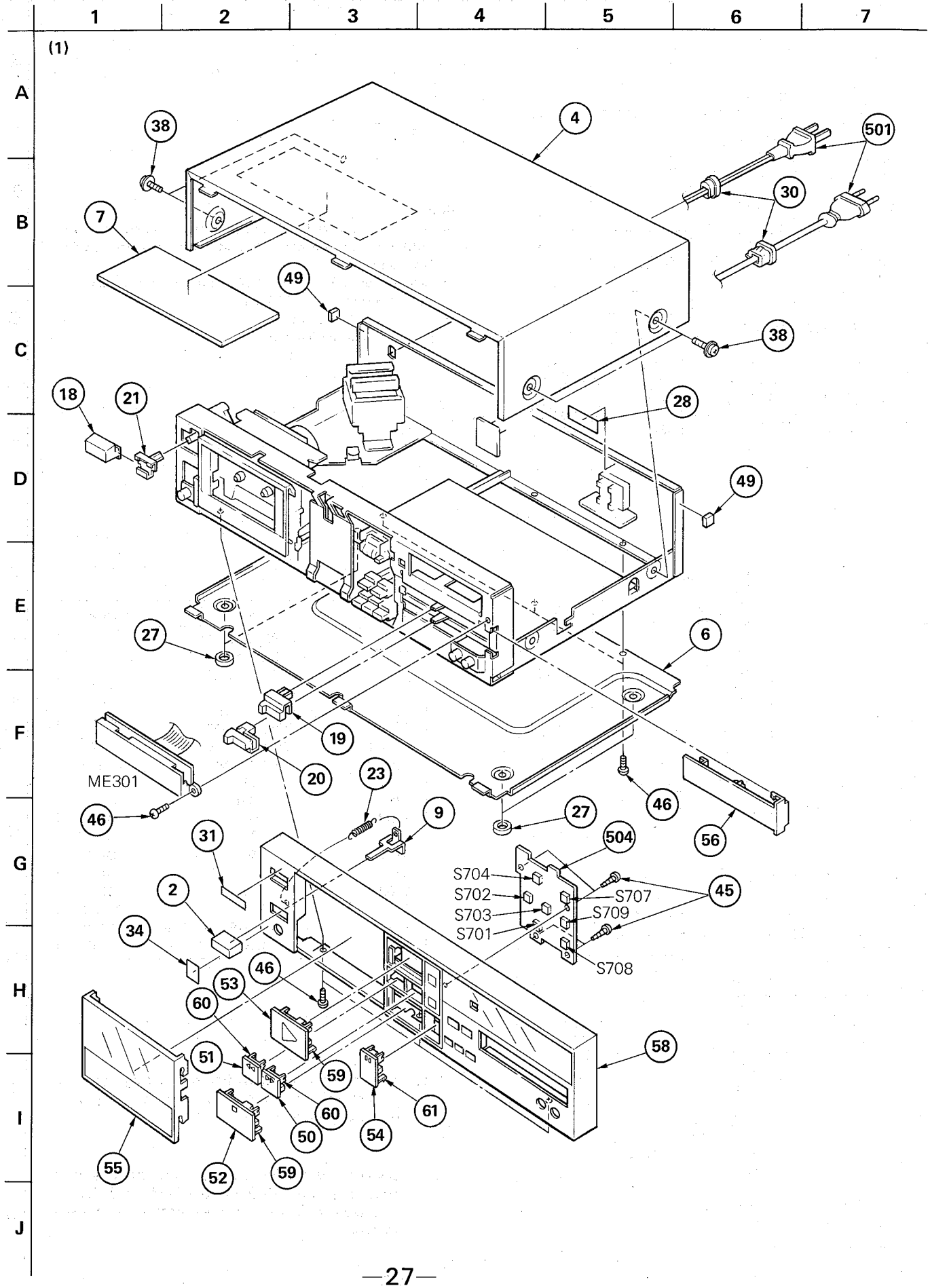

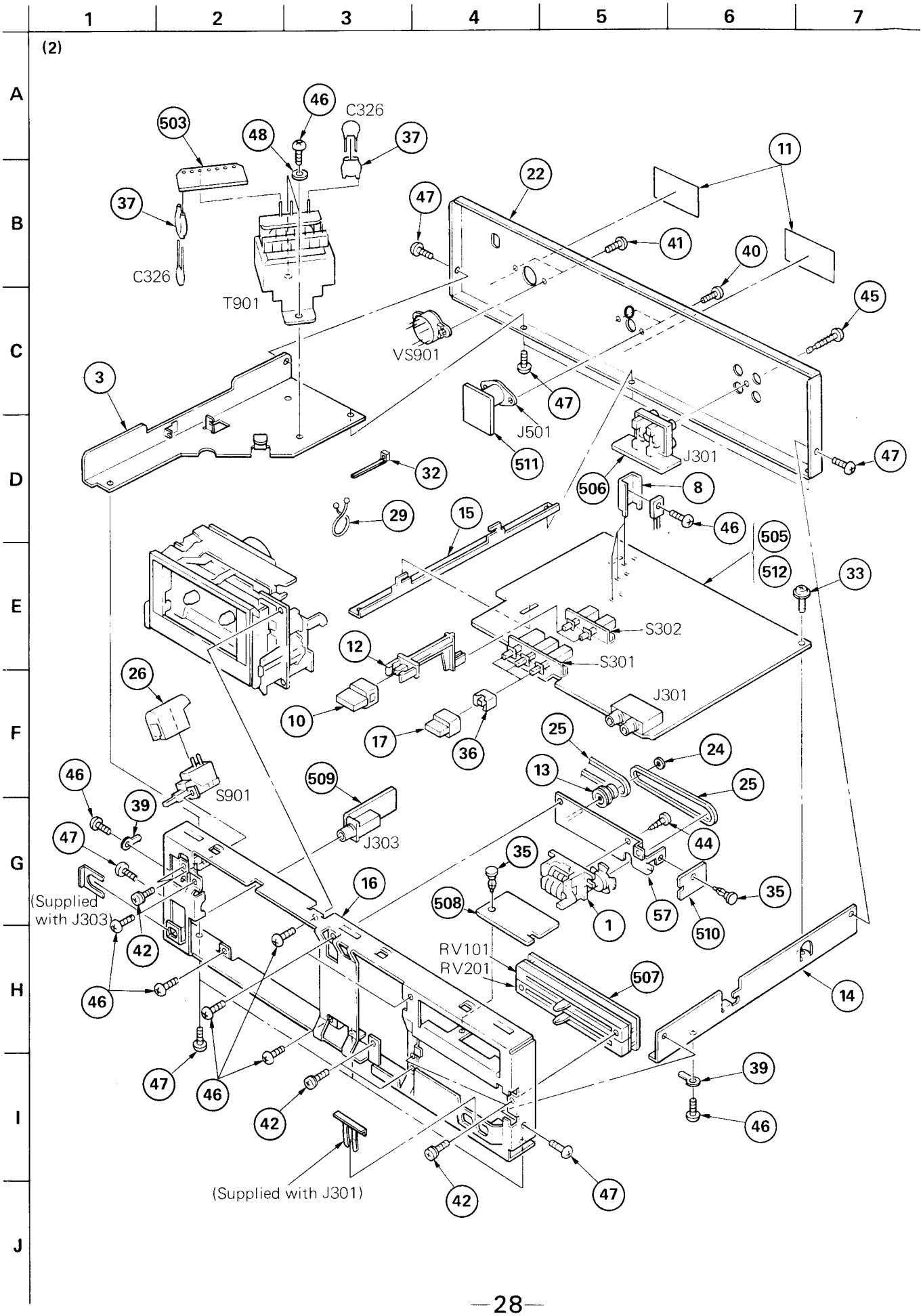
1
2
3
4
5
6
7
A
B
C
D
E
F
G
H
I
J
(2)
503
46
C326
48
37
37
C326
T901
47
22
11
41
40
45
VS901
3
47
J501
511
J301
47
32
506
8
29
15
46
505
512
33
S302
12
S301
26
J301
10
17
36
25
24
13
25
46
S901
509
39
J303
44
47
35
16
35
(Supplied with J303)
508
1
57
510
42
RV101
RV201
507
14
46
47
46
39
42
46
(Supplied with J301)
42
47

(3)

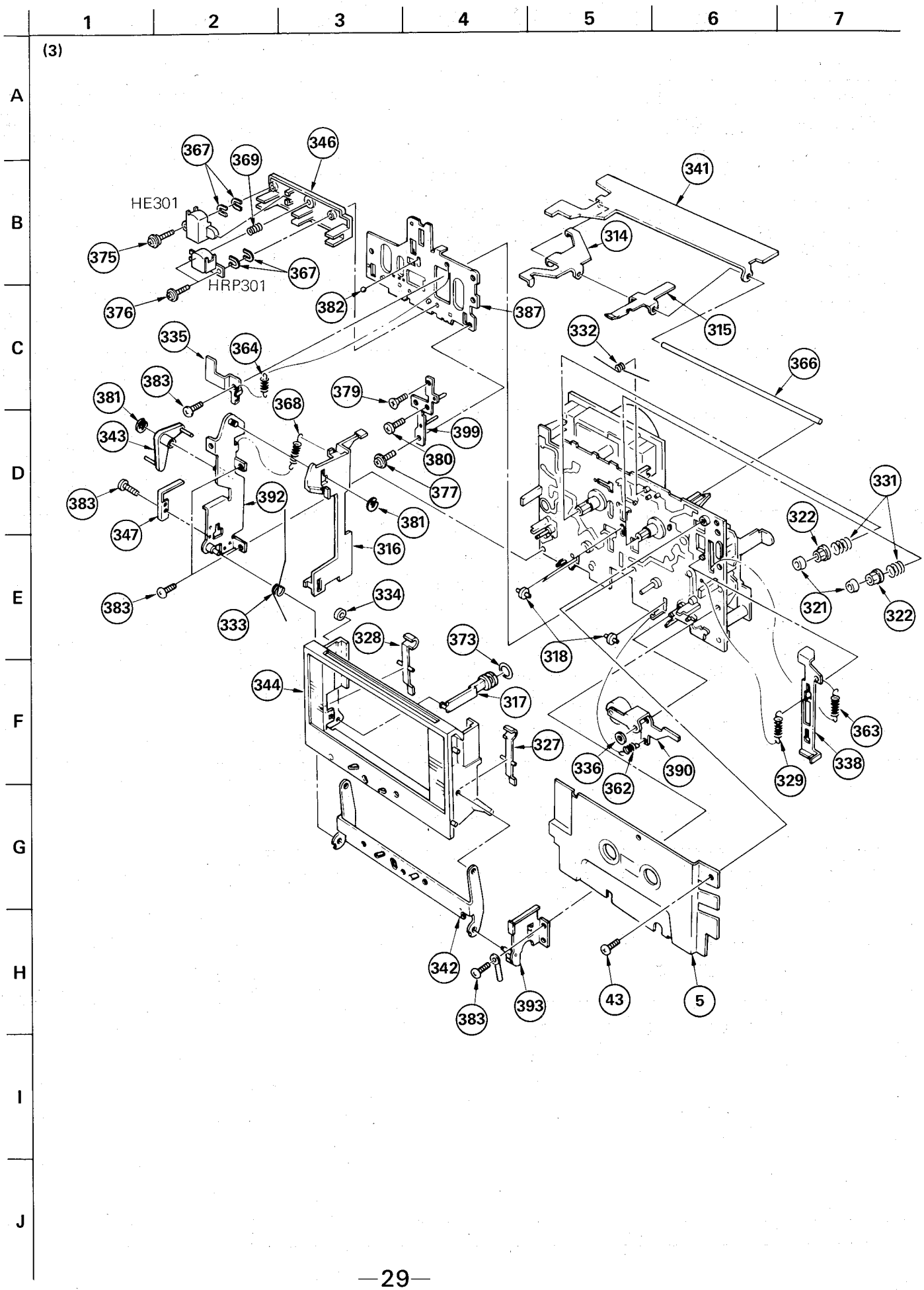
1
2
3
4
5
6
7
A
B
C
D
E
F
G
H
I
J
HE301
HRP301
367
369
346
375
367
376
382
387
341
314
315
332
366
335
364
383
381
343
368
379
399
380
377
383
392
347
381
316
331
322
321
322
383
333
334
328
373
318
344
317
327
363
336
362
390
329
338
342
383
393
43
5

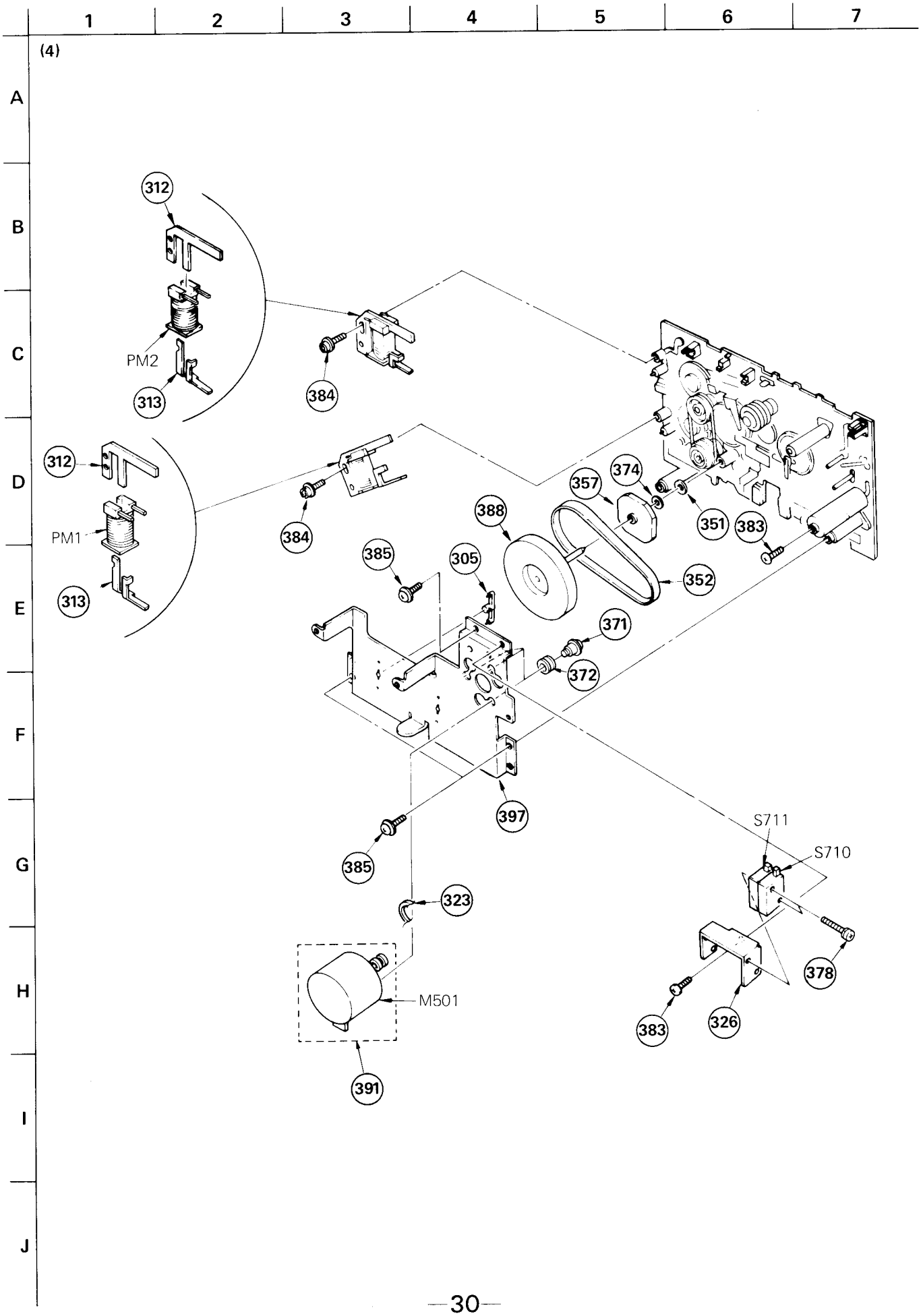
1
2
3
4
5
6
7
A
B
C
D
E
F
G
H
I
J
(4)
312
PM2
313
384
312
PM1
313
384
388
357
374
351
383
385
305
352
371
372
397
385
323
M501
391
S711
S710
378
383
326

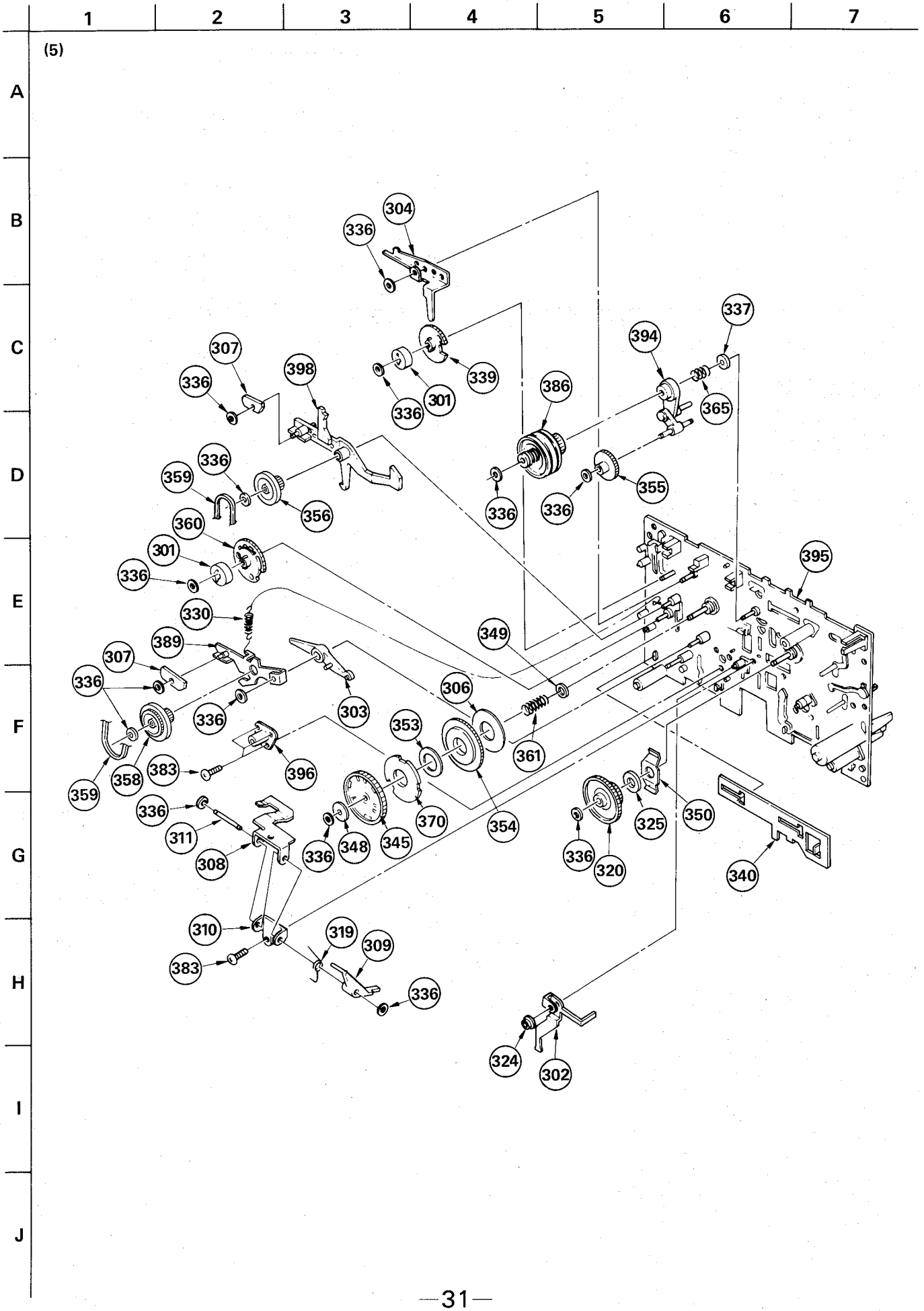
1
2
3
4
5
6
7
A
B
C
D
E
F
G
H
I
J
(5)
304
336
337
394
307
398
339
301
386
365
359
356
355
360
395
330
349
389
306
303
353
361
358
383
396
370
354
325
350
311
308
348
345
320
340
310
319
309
324
302

GENERAL SECTION

No.	Part No.	Description
1	1-548-574-31	COUNTER, TAPE (NORMAL TYPE)
2	3-304-419-31	(BLACK)....BUTTON, EJECT
2	3-304-419-41	(SILVER)...BUTTON, EJECT
3 ♠	;3-307-525-	PLATE, SIDE, LEFT
4	3-307-532-11	(BLACK)....COVER, TOP
4	3-307-532-31	(SILVER)...COVER, TOP
5	3-307-533-00	PLATE, ORNAMENTAL, MD
6 ♠	;3-307-540-00	PLATE, BOTTOM
7	3-307-563-00	SHEET, VIBRATION PROOF
8 ♠	;3-312-615-31	HEAT SINK
9 ♠	;3-313-259-11	PLATE, SLIDE
10	3-315-105-11	(SILVER)...KNOB (5X16), SQUARE
10	3-315-105-21	(BLACK)....KNOB (5X16), SQUARE
11 ♠	;3-318-818-01	(FX310:US,Canadian)...LABEL, MODEL NUMBER (U,CA)
11 ♠	;3-318-819-01	(FX310:AEP).....LABEL, MODEL NUMBER (AE1)
11 ♠	;3-318-820-01	(FX310:UK).....LABEL, MODEL NUMBER (UK)
11 ♠	;3-318-821-01	(FX310:E).....LABEL, MODEL NUMBER (E2/E3)
11 ♠	;3-318-831-01	(FX311).....LABEL, MODEL NUMBER (U,CA)
11 ♠	;3-318-860-01	(FX310:G-AEP)...LABEL, MODEL NUMBER (AE4)
12	3-318-824-01	ROD, KNOB
13	3-318-825-01	PULLEY, MIDWAY
14 ♠	;3-318-827-01	PLATE, SIDE, RIGHT
15 ♠	;3-318-828-01	PLATE, RELAY
16 ♠	;3-318-830-01	CHASSIS, AMPLIFIER
17	3-318-909-01	(SILVER)...KNOB, PUSH
17	3-318-909-11	(BLACK)....KNOB, PUSH
18	3-318-911-01	(SILVER)...KNOB (POWER.L), T MOLD
18	3-318-911-11	(BLACK)....KNOB (POWER.L), T MOLD
19	3-318-913-01	(SILVER)...KNOB (LEFT), REC CONTROL
19	3-318-913-11	(BLACK)....KNOB (LEFT), REC CONTROL
20	3-318-914-01	(SILVER)...KNOB (RIGHT), REC CONTROL
20	3-318-914-11	(BLACK)....KNOB (RIGHT), REC CONTROL
21	3-318-915-01	JOINT (P), KNOB
22 ♠	;3-318-919-11	(FX311).....PLATE, JACK
22 ♠	;3-318-919-21	(FX310:AEP,UK,G-AEP)...PLATE, JACK
22 ♠	;3-318-919-31	(FX310:E).....PLATE, JACK
22 ♠	;3-318-919-41	(FX310:US,Canadian)....PLATE, JACK
23	3-540-244-00	SPRING, TENSION
24	3-558-708-21	WASHER, STOPPER
25	3-571-858-11	BELT, SQUARE
26	3-575-524-00	COVER, POWER SWITCH
27	3-576-731-00	FELT (H)
28	3-701-030-00	LABEL, SERIAL NUMBER

GENERAL SECTION

No.	Part No.	Description
29	3-701-417-00	PURSE LOCK (11 DIA.)
30	3-701-682-00	(FX310:US,Canadian,E,FX311)..STOPPER, CORD
30	3-703-244-02	(FX310:AEP,UK,G-AEP)...BUSHING, CORD
31	3-701-690-00	(FX310:UK)...LABEL (MADE IN JAPAN)
32	3-701-748-00	CLAMP
33	3-703-249-01	SCREW, S TIGHT, +PTTWH 3X6
34	3-703-710-01	STICKER, SONY SYMBOL (12)
35	4-812-134-11	RIVET, NYLON, 3.5
36	4-864-307-00	RING
37	4-875-455-01	(FX310:AEP,UK,G-AEP,E)...COVER (DIA.20), CAPACTOR
38	4-889-321-01	(SILVER)...SCREW
38	4-889-321-11	(BLACK)....SCREW
39	7-623-508-01	LUG, 3
40	7-682-546-09	(FX310:US)...SCREW +B 3X5
41	7-682-547-09	(FX310:E)....SCREW +B 3X6
42	7-682-646-01	SCREW +PS 3X5
43	7-685-104-19	SCREW +P 2X6 TYPE2 NON-SLIT
44	7-685-533-19	SCREW +BTP 2.6X6 TYPE2 N-S
45	7-685-546-19	SCREW +BTP 3X8 TYPE2 N-S
46	7-685-871-01	SCREW +BVTT 3X6 (S)
47	7-685-871-09	SCREW +BVTT 3X6 (S)
48	7-688-004-11	W 4, MIDDLE
49	9-911-840-XX	RUBBER (B)
50	3-318-804-01	(FX310:SILVER)...KNOB, FF
50	3-318-804-11	(FX310:BLACK)....KNOB, FF
50	3-318-804-21	(FX311).....KNOB, FF
51	3-318-804-31	(FX310:SILVER)...KNOB, REW
51	3-318-804-41	(FX310:BLACK)....KNOB, REW
51	3-318-804-51	(FX311).....KNOB, REW
52	3-318-805-01	(FX310:SILVER)...KNOB, STOP
52	3-318-805-11	(FX310:BLACK)....KNOB, STOP
52	3-318-805-21	(FX311).....KNOB, STOP
53	X-3318-820-1	(FX310:SILVER)...KNOB, FWD
53	X-3318-820-2	(FX310:BLACK)....KNOB, FWD
53	X-3318-820-3	(FX311).....KNOB, FWD
54	X-3318-821-1	(FX310:SILVER)...KNOB, PAUSE
54	X-3318-821-4	(FX310:BLACK)....KNOB, PAUSE
54	X-3318-821-3	(FX311).....KNOB, PAUSE
55	X-3318-801-1	(FX310:SILVER)...WINDOW ASSY (S), CASSETTE
55	X-3318-802-1	(FX310:BLACK)....WINDOW ASSY (B), CASSETTE
55	X-3318-806-1	(FX311)....WINDOW ASSY, CASSETTE
56	X-3318-803-1	(FX310:SILVER)...PLATE ASSY (S), ORNAMENTAL
56	X-3318-804-1	(FX310:BLACK)....PLATE ASSY (B), ORNAMENTAL
56	X-3318-807-1	(FX311)....PLATE ASSY, ORNAMENTAL
57	X-3318-805-1	BRACKET ASSY, COUNTER

NOTE:

- The mechanical parts with no reference number in the exploded views are not supplied.
- Items marked " ♠ " are not stocked since they are seldom required for routine service. Some delay should be anticipated when ordering these items.
- Due to standardization, parts with part numbers (Δ-ΔΔΔ-ΔΔΔ-XX or Δ-ΔΔΔΔ-ΔΔΔ-X) may be different from those used in the set.
- If there are two or more same circuits in a set such as a stereophonic machine, only typical circuit parts may be indicated and capacitors and resistors in other same circuits may be omitted.

CAPACITORS:

- All capacitors are in μF. Common capacitors are omitted. Refer to the following lists for their part numbers. MF:μF, PF:μμF.

COILS

- MMH : mH, UH : μH

SEMICONDUCTORS

In each case, U : μ, for example:
UA···: μA···, UPA···: μPA···, UPC···: μPC,
UPD···: μPD···

GENERAL SECTION

No.	Part No.	Description
58	X-3318-810-1	(FX310:SILVER)...PANEL ASSY (S), FRONT
58	X-3318-811-1	(FX310:BLACK)....PANEL ASSY (B), FRONT
58	X-3318-812-1	(FX311)....PANEL ASSY, FRONT
59	3-318-814-01	MOLD, KNOB, FWD
60	3-318-815-01	MOLD, KNOB, FF/REW
61	3-318-816-01	MOLD, KNOB, PAUSE

ACCESSORY & PACKING MATERIAL

No.	Part No.	Description
101	1-551-734-11	CORD, CONNECTION (RK-74A)
102	3-312-976-00	(FX311)....SHEET, PROTECTION, PANEL
103	3-315-149-00	CUSHION (LEFT), LOWER
104	3-315-150-00	CUSHION (RIGHT), LOWER
105	3-315-151-00	CUSHION (LEFT), UPPER
106	3-315-152-00	CUSHION (RIGHT), UPPER
107	3-318-854-00	(FX310:UK,E)...INDIVIDUAL CARTON
107	3-318-858-00	(FX310:US,Canadian,AEP,G-AEP) ...INDIVIDUAL CARTON
107	3-318-859-00	(FX311).....INDIVIDUAL CARTON
108	3-573-625-00	SHEET, POLYETHYLENE
109	3-701-328-00	(FX310:US,Canadian,AEP,G-AEP) ...LABEL, PRODUCT COLOR
110	3-701-630-00	BAG, POLYETHYLENE
111	3-773-854-11	(FX310:Canadian,AEP,UK,E)...MANUAL, INSTRUCTION
111	3-773-854-21	(FX310:US,FX311)....MANUAL, INSTRUCTION
111	3-773-854-41	(FX310:AEP,G-AEP)...MANUAL, INSTRUCTION
112	3-793-828-11	QUESTIONNAIRE
113	4-876-352-00	SHEET, PROTECTION
114	X-3701-105-0	ROD ASSY, CLEANING, HEAD

MECHANISM SECTION

No.	Part No.	Description
301	1-452-202-00	MAGNET
302 ♣	3-307-301-00	LEVER (RELAY), FWD SELECT
303	3-307-307-00	LEVER, FWD
304 ♣	3-307-308-00	LEVER, FF
305	3-307-309-00	RETAINER (A), THRUST
306	3-307-313-00	PLATE, YOKE
307	3-307-315-01	ARBOR, MOVABLE
308	3-307-319-00	RETAINER, TAKE-UP GEAR
309	3-307-328-00	LEVER, TAKE-UP SELECTION
310 ♣	3-307-329-00	PLATE, FULCRUM,SELECTION LEVER
311	3-307-330-00	PIN, FULCRUM PLATE
312	3-307-332-00	ARBOR, FIXED
313	3-307-333-00	ARBOR, TRIGGER
314 ♣	3-307-337-00	LEVER, REC DETECTION
315 ♣	3-307-344-00	LEVER, HALF RETAINER
316	3-307-345-00	SLIDER, EJECT
317	3-307-347-00	PISTON
318	3-307-348-00	ROLLER
319	3-307-355-00	SPRING
320	3-307-360-00	GEAR (S), REEL
321	3-307-362-00	CAP, REEL
322	3-307-363-00	CLAW (N), REEL
323	3-307-366-00	BELT, FAST FORWARD
324	3-307-367-00	BUSHING, SELECT LEVER
325	3-307-369-00	FELT, LIMITER
326 ♣	3-307-370-00	BRACKET, SWITCH
327	3-307-371-00	SPRING (LEFT)
328	3-307-372-00	SPRING (RIGHT)
329	3-307-374-00	SPRING, TENSION
330	3-307-378-00	SPRING, TENSION
331	3-307-380-00	SPRING, COMPRESSION
332	3-307-382-00	SPRING
333	3-307-383-00	SPRING
334	3-307-390-00	BUSHING, LOADING SPRING
335	3-307-391-00	SPRING
336	3-307-394-00	RETAINER (B), THRUST
337	3-307-395-00	RETAINER, SPRING
338	3-307-397-00	SLIDER, PAUSE
339	3-307-401-00	GEAR, FF CAM
340 ♣	3-307-403-00	SLIDER, FWD
341 ♣	3-307-404-00	RETAINER, DETECTION SWITCH
342	3-307-405-00	PLATE, FULCRUM, CASSETTE HOLDER
343	3-307-406-00	LEVER, EJECT
344	3-307-407-31	HOLDER, CASSETTE
345	3-307-412-00	GEAR, TAKE-UP REEL

NOTE:

- The mechanical parts with no reference number in the exploded views are not supplied.
- Items marked " ♣ " are not stocked since they are seldom required for routine service. Some delay should be anticipated when ordering these items.
- Due to standardization, parts with part numbers (Δ-ΔΔΔ-ΔΔΔ-XX or Δ-ΔΔΔΔ-ΔΔΔ-X) may be different from those used in the set.
- If there are two or more same circuits in a set such as a stereophonic machine, only typical circuit parts may be indicated and capacitors and resistors in other same circuits may be omitted.

CAPACITORS:

- All capacitors are in μF. Common capacitors are omitted. Refer to the following lists for their part numbers. MF:μF, PF:μμF.

COILS

- MMH : mH, UH : μH

SEMICONDUCTORS

In each case, U : μ, for example:
UA···: μA···, UPA···: μPA···, UPC···: μPC,
UPD···: μPD···

ELECTRICAL PARTS

Ref No.	Part No.	Description			
C237	1-136-163-00	FILM	0.068MF	5%	50V
C238	1-136-166-00	FILM	0.12MF	5%	50V
C239	1-123-380-00	ELECT	1MF	20%	50V
C245	1-123-369-00	ELECT	4.7MF	20%	50V
C250	1-123-380-00	ELECT	1MF	20%	50V
C251	1-123-356-00	ELECT	10MF	20%	50V
C260	1-162-113-00	CERAMIC	0.01MF	30%	16V
C261	1-162-110-00	CERAMIC	0.001MF	10%	50V
C301	1-123-336-00	ELECT	470MF	20%	25V
C302	1-123-336-00	ELECT	470MF	20%	25V
C303	1-123-320-00	ELECT	100MF	20%	16V
C304	1-123-320-00	ELECT	100MF	20%	16V
C305	1-123-356-00	ELECT	10MF	20%	50V
C306	1-123-310-00	ELECT	470MF	20%	10V
C307	1-123-310-00	ELECT	470MF	20%	10V
C308	1-123-356-00	ELECT	10MF	20%	50V
C309	1-123-306-00	ELECT	47MF	20%	10V
C310	1-123-323-00	ELECT	470MF	20%	16V
C311	1-123-356-00	ELECT	10MF	20%	50V
C312	1-123-308-00	ELECT	220MF	20%	10V
C313	1-123-356-00	ELECT	10MF	20%	50V
C314	1-123-356-00	ELECT	10MF	20%	50V
C315	1-123-369-00	ELECT	4.7MF	20%	50V
C316	1-123-369-00	ELECT	4.7MF	20%	50V
C317	1-129-708-00	FILM	0.0033MF	10%	630V
C318	1-130-287-00	FILM	0.0039MF	5%	100V
C319	1-130-293-00	FILM	0.0068MF	5%	100V
C320	1-130-293-00	FILM	0.0068MF	5%	100V
C321	1-123-380-00	ELECT	1MF	20%	50V
C322	1-162-029-00	CERAMIC	47PF	5%	50V
C323	1-123-379-00	ELECT	0.47MF	20%	50V
C324	1-123-356-00	ELECT	10MF	20%	50V
C326⚠	1-161-744-00	CAP, CERAMIC	0.01MF	FZ	
C327	1-162-113-00	CERAMIC	0.01MF	30%	16V
C328	1-162-113-00	CERAMIC	0.01MF	30%	16V
C329	1-162-113-00	CERAMIC	0.01MF	30%	16V
C330	1-123-318-00	ELECT	33MF	20%	16V
C501	1-162-113-00	CERAMIC	0.01MF	30%	16V
C502	1-162-113-00	CERAMIC	0.01MF	30%	16V
C503	1-162-113-00	CERAMIC	0.01MF	30%	16V
C504	1-162-113-00	CERAMIC	0.01MF	30%	16V
C505	1-162-113-00	CERAMIC	0.01MF	30%	16V
C506	1-162-113-00	CERAMIC	0.01MF	30%	16V
C507	1-162-113-00	CERAMIC	0.01MF	30%	16V
C508	1-162-113-00	CERAMIC	0.01MF	30%	16V

ELECTRICAL PARTS

Ref No.	Part No.	Description			
C509	1-123-308-00	ELECT	220MF	20%	10V
C510	1-123-306-00	ELECT	47MF	20%	10V
C511	1-123-380-00	ELECT	1MF	20%	50V
C512	1-108-571-00	MYLAR	0.0047MF	5%	50V
C513	1-123-380-00	ELECT	1MF	20%	50V
C515	1-161-326-00	(FX310:US,Canadian)...CERAMIC	0.022MF	30%	50V
C516	1-161-326-00	(FX310:US,Canadian)...CERAMIC	0.0022MF	30%	50V
♣CNP301	1-560-064-00	PIN, CONNECTOR 6P			
♣CNP302	1-560-060-00	PIN, CONNECTOR 2P			
♣CNP304	1-560-062-00	PIN, CONNECTOR 4P			
♣CNP501	1-560-062-00	PIN, CONNECTOR 4P			
♣CNP502	1-560-062-00	PIN, CONNECTOR 4P			
♣CNP503	1-560-061-00	PIN, CONNECTOR 3P			
♣CNP504	1-560-065-00	PIN, CONNECTOR 8P			
CT101	1-141-225-00	CAP, TUNING, TRIMAR			
CT201	1-141-225-00	CAP, TUNING, TRIMAR			
D301	8-719-200-02	DIODE 10E2			
D302	8-719-200-02	DIODE 10E2			
D303	8-719-200-02	DIODE 10E2			
D304	8-719-200-02	DIODE 10E2			
D305	8-719-200-02	DIODE 10E2			
D306	8-719-200-02	DIODE 10E2			
D307	8-719-910-64	DIODE HZ6B1L			
D308	8-719-910-15	DIODE HZ11B2L			
D309	8-719-102-72	DIODE RD5.6EN3			
D311	8-719-107-94	DIODE 1SS202-1			
D501	8-719-200-02	DIODE 10E2			
D502	8-719-107-94	DIODE 1SS202-1			
D503	8-719-107-94	DIODE 1SS202-1			
D504	8-719-107-94	DIODE 1SS202-1			
D505	8-719-107-94	DIODE 1SS202-1			
D701	8-719-907-81	DIODE BG5535S (FWD)			
D704	8-719-907-84	DIODE PR5535S (REC)			
D705	8-719-907-80	DIODE AA5535S (PAUSE)			
HE301	8-825-724-00	HEAD, ERASE EF201-36			
HRP301	8-825-507-50	HEAD, REC/PB (PP227-3602C)			
IC101	8-752-002-70	IC CX20027			
IC201	8-752-002-80	IC CX20028			
IC301	8-759-101-56	IC CX10033A			
IC302	8-759-101-55	IC CX10032A			
IC303	8-759-600-02	IC M5218L			
IC501	8-759-202-05	IC TC9310N-040			
IC502	8-759-700-46	(FX310:US,Canadian)...IC CX10034			

NOTE:

- The mechanical parts with no reference number in the exploded views are not supplied.
- Items marked " ♣ " are not stocked since they are seldom required for routine service. Some delay should be anticipated when ordering these items.
- Due to standardization, parts with part numbers (Δ-ΔΔΔ-ΔΔΔ-XX or Δ-ΔΔΔΔ-ΔΔΔ-X) may be different from those used in the set.
- If there are two or more same circuits in a set such as a stereophonic machine, only typical circuit parts may be indicated and capacitors and resistors in other same circuits may be omitted.

CAPACITORS:

- All capacitors are in μF. Common capacitors are omitted. Refer to the following lists for their part numbers. MF:μF, PF:μμF.

COILS

- MMH : mH, UH : μH

SEMICONDUCTORS

In each case, U : μ, for example:
UA···: μA···, UPA···: μPA···, UPC···: μPC, UPD···: μPD···

The components identified by shading and mark ⚠ are critical for safety. Replace only with part number specified.

Les composants identifiés par une trame et une marque ⚠ sont critiques pour la sécurité. Ne les remplacer que par une pièce portant le numéro spécifié.

ELECTRICAL PARTS

Ref No.	Part No.	Description
J301	1-507-797-21	JACK, LARGE TYPE (MIC)
J302	1-507-908-11	JACK, PIN 4P (LINE IN/LINE OUT)
J303	1-507-796-21	JACK (HEADPHONES)
J501 ♠	1-562-544-11	(FX310:US,Canadian)...SOCKET, CONNECTOR (REMOTE)
L101	1-408-930-00	MICRO INDUCTOR 33MMH
L102	1-408-922-00	MICRO INDUCTOR 6.8MMH
L201	1-408-930-00	MICRO INDUCTOR 33MMH
L202	1-408-922-00	MICRO INDUCTOR 6.8MMH
L301	1-407-177-XX	MICRO INDUCTOR 470UH
LPF101	1-231-388-00	FILTER, LOW PASS
LPF201	1-231-388-00	FILTER, LOW PASS
M501	1-541-201-00	MOTOR
ME301	1-520-466-11	(FX310)....METER, LEVEL
ME301	1-520-473-11	(FX311)....METER, LEVEL
PM1	1-454-316-00	SOLENOID, PLUNGER (FF, PAUSE)
PM2	1-454-316-00	SOLENOID, PLUNGER (FWD)
Q101	8-729-100-13	TRANSISTOR 2SC2001
Q102	8-729-245-83	TRANSISTOR 2SC2458
Q103	8-729-245-83	TRANSISTOR 2SC2458
Q201	8-729-100-13	TRANSISTOR 2SC2001
Q202	8-729-245-83	TRANSISTOR 2SC2458
Q203	8-729-245-83	TRANSISTOR 2SC2458
Q301	8-729-100-13	TRANSISTOR 2SC2001
Q302	8-729-180-93	TRANSISTOR 2SD809
Q303	8-729-245-83	TRANSISTOR 2SC2458
Q304	8-729-117-54	TRANSISTOR 2SA1175
Q305	8-729-173-13	TRANSISTOR 2SB731
Q306	8-729-141-43	TRANSISTOR 2SD414
Q307	8-729-663-47	TRANSISTOR 2SC1364
Q308	8-729-663-47	TRANSISTOR 2SC1364
Q309	8-729-178-54	TRANSISTOR 2SC2785
Q310	8-729-900-61	TRANSISTOR DTA114ES
Q311	8-729-900-80	TRANSISTOR DTC114ES
Q312	8-729-178-54	TRANSISTOR 2SC2785
Q501	8-729-117-54	TRANSISTOR 2SA1175
Q502	8-729-117-54	TRANSISTOR 2SA1175
Q503	8-729-117-54	TRANSISTOR 2SA1175
Q504	8-729-900-80	TRANSISTOR DTC114ES
Q505	8-729-900-80	TRANSISTOR DTC114ES
Q507	8-719-902-90	PHOTO INTERRUPTOR SPI201-20
R101	1-247-167-00	CARBON 33K 5% 1/4W
R102	1-247-139-00	CARBON 2.2K 5% 1/4W
R103	1-247-855-00	CARBON 10K 5% 1/6W

ELECTRICAL PARTS

Ref No.	Part No.	Description			
R104	1-247-819-00	CARBON	330	5%	1/6W
R105	1-247-866-00	CARBON	30K	5%	1/6W
R106	1-247-879-00	CARBON	100K	5%	1/6W
R109	1-247-843-00	CARBON	3.3K	5%	1/6W
R110	1-247-831-00	CARBON	1K	5%	1/6W
R111	1-247-851-00	CARBON	6.8K	5%	1/6W
R113	1-247-887-00	CARBON	220K	5%	1/6W
R114	1-247-807-00	CARBON	100	5%	1/6W
R115	1-247-882-00	CARBON	130K	5%	1/6W
R116	1-247-849-00	CARBON	5.6K	5%	1/6W
R117	1-246-529-00	CARBON	220K	5%	1/4W
R118	1-247-849-00	CARBON	5.6K	5%	1/6W
R119	1-247-139-00	CARBON	2.2K	5%	1/4W
R120	1-247-857-00	CARBON	12K	5%	1/6W
R121	1-247-887-00	CARBON	220K	5%	1/6W
R122	1-247-861-00	CARBON	18K	5%	1/6W
R123	1-247-811-00	CARBON	150	5%	1/6W
R124	1-247-855-00	CARBON	10K	5%	1/6W
R125	1-246-474-00	CARBON	1.1K	5%	1/4W
R126	1-247-155-00	CARBON	10K	5%	1/4W
R127	1-246-472-00	CARBON	910	5%	1/4W
R128	1-246-484-00	CARBON	3K	5%	1/4W
R129	1-246-490-00	CARBON	5.1K	5%	1/4W
R130	1-247-165-00	CARBON	27K	5%	1/4W
R131	1-246-466-00	CARBON	510	5%	1/4W
R132	1-246-537-00	CARBON	470K	5%	1/4W
R133	1-214-776-00	METAL	91K	1%	1/4W
R134	1-247-171-00	CARBON	47K	5%	1/4W
R135	1-246-480-00	CARBON	2K	5%	1/4W
R136	1-246-490-00	CARBON	5.1K	5%	1/4W
R137	1-247-847-00	CARBON	4.7K	5%	1/6W
R138	1-247-855-00	CARBON	10K	5%	1/6W
R140	1-247-855-00	CARBON	10K	5%	1/6W
R141	1-247-831-00	CARBON	1K	5%	1/6W
R142	1-247-879-00	CARBON	100K	5%	1/6W
R143	1-247-165-00	CARBON	27K	5%	1/4W
R144	1-247-837-00	CARBON	1.8K	5%	1/6W
R146	1-247-813-00	CARBON	180	5%	1/6W
R147	1-247-853-00	CARBON	8.2K	5%	1/6W
R148	1-247-842-00	CARBON	3K	5%	1/6W
R149	1-247-842-00	CARBON	3K	5%	1/6W
R150	1-247-849-00	CARBON	5.6K	5%	1/6W
R151	1-247-888-00	CARBON	240K	5%	1/6W
R152	1-247-886-00	CARBON	200K	5%	1/6W
R153	1-247-887-00	CARBON	220K	5%	1/6W

NOTE:

- The mechanical parts with no reference number in the exploded views are not supplied.
- Items marked " ♠ " are not stocked since they are seldom required for routine service. Some delay should be anticipated when ordering these items.
- Due to standardization, parts with part numbers (Δ-ΔΔΔ-ΔΔΔ-XX or Δ-ΔΔΔΔ-ΔΔΔ-X) may be different from those used in the set.
- If there are two or more same circuits in a set such as a stereophonic machine, only typical circuit parts may be indicated and capacitors and resistors in other same circuits may be omitted.

CAPACITORS:

- All capacitors are in μF. Common capacitors are omitted. Refer to the following lists for their part numbers. MF:μF, PF:μμF.

COILS

- MMH : mH, UH : μH

SEMICONDUCTORS

In each case, U : μ, for example:
UA···: μA···, UPA···: μPA···, UPC···: μPC, UPD···: μPD···

ELECTRICAL PARTS

Ref No.	Part No.	Description			
R154	1-247-845-00	CARBON	3.9K	5%	1/6W
R155	1-247-886-00	CARBON	200K	5%	1/6W
R156	1-247-887-00	CARBON	220K	5%	1/6W
R157	1-247-820-00	CARBON	360	5%	1/6W
R158	1-247-845-00	CARBON	3.9K	5%	1/6W
R160	1-247-843-00	CARBON	3.3K	5%	1/6W
R161	1-247-857-00	CARBON	12K	5%	1/6W
R162	1-247-816-00	CARBON	240	5%	1/6W
R163	1-247-853-00	CARBON	8.2K	5%	1/6W
R164	1-247-872-00	CARBON	51K	5%	1/6W
R165	1-247-145-00	CARBON	4.3K	5%	1/4W
R201	1-247-167-00	CARBON	33K	5%	1/4W
R202	1-247-139-00	CARBON	2.2K	5%	1/4W
R203	1-247-855-00	CARBON	10K	5%	1/6W
R204	1-247-819-00	CARBON	330	5%	1/6W
R205	1-247-866-00	CARBON	30K	5%	1/6W
R206	1-247-879-00	CARBON	100K	5%	1/6W
R209	1-247-843-00	CARBON	3.3K	5%	1/6W
R210	1-247-831-00	CARBON	1K	5%	1/6W
R211	1-247-851-00	CARBON	6.8K	5%	1/6W
R213	1-247-887-00	CARBON	220K	5%	1/6W
R214	1-247-807-00	CARBON	100	5%	1/6W
R215	1-247-882-00	CARBON	130K	5%	1/6W
R216	1-247-849-00	CARBON	5.6K	5%	1/6W
R217	1-246-529-00	CARBON	220K	5%	1/4W
R218	1-247-849-00	CARBON	5.6K	5%	1/6W
R219	1-247-139-00	CARBON	2.2K	5%	1/4W
R220	1-247-857-00	CARBON	12K	5%	1/6W
R221	1-247-887-00	CARBON	220K	5%	1/6W
R222	1-247-861-00	CARBON	18K	5%	1/6W
R223	1-247-811-00	CARBON	150	5%	1/6W
R224	1-247-855-00	CARBON	10K	5%	1/6W
R225	1-246-474-00	CARBON	1.1K	5%	1/4W
R226	1-247-155-00	CARBON	10K	5%	1/4W
R227	1-246-472-00	CARBON	910	5%	1/4W
R228	1-246-484-00	CARBON	3K	5%	1/4W
R229	1-246-490-00	CARBON	5.1K	5%	1/4W
R230	1-247-165-00	CARBON	27K	5%	1/4W
R231	1-246-466-00	CARBON	510	5%	1/4W
R232	1-246-537-00	CARBON	470K	5%	1/4W
R233	1-214-776-00	METAL	91K	1%	1/4W
R234	1-247-171-00	CARBON	47K	5%	1/4W
R235	1-246-480-00	CARBON	2K	5%	1/4W
R236	1-246-490-00	CARBON	5.1K	5%	1/4W
R237	1-247-847-00	CARBON	4.7K	5%	1/6W

ELECTRICAL PARTS

Ref No.	Part No.	Description			
R238	1-247-855-00	CARBON	10K	5%	1/6W
R240	1-247-855-00	CARBON	10K	5%	1/6W
R241	1-247-831-00	CARBON	1K	5%	1/6W
R242	1-247-879-00	CARBON	100K	5%	1/6W
R243	1-247-165-00	CARBON	27K	5%	1/4W
R244	1-247-837-00	CARBON	1.8K	5%	1/6W
R246	1-247-813-00	CARBON	180	5%	1/6W
R247	1-247-853-00	CARBON	8.2K	5%	1/6W
R248	1-247-842-00	CARBON	3K	5%	1/6W
R249	1-247-842-00	CARBON	3K	5%	1/6W
R250	1-247-849-00	CARBON	5.6K	5%	1/6W
R251	1-247-888-00	CARBON	240K	5%	1/6W
R252	1-247-886-00	CARBON	200K	5%	1/6W
R253	1-247-887-00	CARBON	220K	5%	1/6W
R254	1-247-845-00	CARBON	3.9K	5%	1/6W
R255	1-247-886-00	CARBON	200K	5%	1/6W
R256	1-247-887-00	CARBON	220K	5%	1/6W
R257	1-247-820-00	CARBON	360	5%	1/6W
R258	1-247-845-00	CARBON	3.9K	5%	1/6W
R260	1-247-843-00	CARBON	3.3K	5%	1/6W
R261	1-247-857-00	CARBON	12K	5%	1/6W
R262	1-247-816-00	CARBON	240	5%	1/6W
R263	1-247-853-00	CARBON	8.2K	5%	1/6W
R264	1-247-872-00	CARBON	51K	5%	1/6W
R265	1-247-145-00	CARBON	4.3K	5%	1/4W
R301	1-202-850-00	(FX310:AEP,UK,G-AEP,E)...RES SOLID		2.2 Y%	1/4W
R302	1-202-850-00	(FX310:AEP,UK,G-AEP,E)...RES SOLID		2.2 Y%	1/4W
R303	1-247-131-00	CARBON	1K	5%	1/4W
R304	1-247-131-00	CARBON	1K	5%	1/4W
R305	1-247-131-00	CARBON	1K	5%	1/4W
R306	1-247-131-00	CARBON	1K	5%	1/4W
R307	1-246-492-00	CARBON	6.2K	5%	1/4W
R308	1-246-494-00	CARBON	7.5K	5%	1/4W
R309	1-246-495-00	CARBON	8.2K	5%	1/4W
R310	1-246-472-00	CARBON	910	5%	1/4W
R311	1-247-139-00	CARBON	2.2K	5%	1/4W
R312	1-247-139-00	CARBON	2.2K	5%	1/4W
R313	1-247-823-00	CARBON	470	5%	1/6W
R314	1-247-846-00	CARBON	4.3K	5%	1/6W
R316	1-247-843-00	CARBON	3.3K	5%	1/6W
R317	1-247-857-00	CARBON	12K	5%	1/6W
R318	1-247-857-00	CARBON	12K	5%	1/6W
R319	1-246-437-00	CARBON	33	5%	1/4W
R320	1-247-854-00	CARBON	9.1K	5%	1/6W
R321	1-247-854-00	CARBON	9.1K	5%	1/6W

NOTE:

- The mechanical parts with no reference number in the exploded views are not supplied.
- Items marked " ♦ " are not stocked since they are seldom required for routine service. Some delay should be anticipated when ordering these items.
- Due to standardization, parts with part numbers (Δ-ΔΔΔ-ΔΔΔ-XX or Δ-ΔΔΔΔ-ΔΔΔ-X) may be different from those used in the set.
- If there are two or more same circuits in a set such as a stereophonic machine, only typical circuit parts may be indicated and capacitors and resistors in other same circuits may be omitted.

CAPACITORS:

- All capacitors are in μF. Common capacitors are omitted. Refer to the following lists for their part numbers. MF:μF, PF:μμF.

COILS

- MMH : mH, UH : μH

SEMICONDUCTORS

In each case, U : μ, for example:
UA···: μA···, UPA···: μPA···, UPC···: μPC,
UPD···: μPD···

ELECTRICAL PARTS

Ref No.	Part No.	Description			
R322	1-247-849-00	CARBON	5.6K	5%	1/6W
R323	1-247-829-00	CARBON	820	5%	1/6W
R330	1-247-839-00	CARBON	2.2K	5%	1/6W
R332	1-247-843-00	CARBON	3.3K	5%	1/6W
R334	1-247-807-00	CARBON	100	5%	1/6W
R350	1-247-879-00	CARBON	100K	5%	1/6W
R352	1-247-815-00	CARBON	220	5%	1/6W
R353	1-247-815-00	CARBON	220	5%	1/6W
R501	1-247-831-00	CARBON	1K	5%	1/6W
R502	1-247-831-00	CARBON	1K	5%	1/6W
R503	1-247-831-00	CARBON	1K	5%	1/6W
R504	1-247-831-00	CARBON	1K	5%	1/6W
R505	1-247-831-00	CARBON	1K	5%	1/6W
R506	1-247-831-00	CARBON	1K	5%	1/6W
R507	1-247-831-00	CARBON	1K	5%	1/6W
R508	1-247-831-00	CARBON	1K	5%	1/6W
R509	1-247-872-00	CARBON	51K	5%	1/6W
R510	1-247-879-00	CARBON	100K	5%	1/6W
R511	1-247-863-00	CARBON	22K	5%	1/6W
R512	1-247-115-00	CARBON	220	5%	1/4W
R513	1-247-121-00	CARBON	390	5%	1/4W
R514	1-247-111-00	CARBON	150	5%	1/4W
R515	1-247-839-00	CARBON	2.2K	5%	1/6W
R516	1-247-839-00	CARBON	2.2K	5%	1/6W
R519	1-247-855-00	CARBON	10K	5%	1/6W
R520	1-247-879-00	CARBON	100K	5%	1/6W
R521	1-247-879-00	CARBON	100K	5%	1/6W
R522	1-247-119-00	CARBON	330	5%	1/4W
R523	1-247-147-00	CARBON	4.7K	5%	1/4W
R524	1-247-155-00	(FX310:US,Canadian)..CARBON 10K 5% 1/4W			
R551	1-247-155-00	(FX310:US,Canadian)..CARBON 10K 5% 1/4W			
RV101	1-226-991-00	RES, VAR, SLIDE 20K/20K (REC LEVEL-L)			
RV102	1-226-236-00	RES, ADJ, CARBON 10K			
RV103	1-226-852-00	RES, ADJ, CARBON 22K			
RV104	1-226-236-00	RES, ADJ, CARBON 10K			
RV201	1-226-991-00	RES, VAR, SLIDE 20K/20K (REC LEVEL-R)			
RV202	1-226-236-00	RES, ADJ, CARBON 10K			
RV203	1-226-852-00	RES, ADJ, CARBON 22K			
RV204	1-226-236-00	RES, ADJ, CARBON 10K			
RY201	1-515-473-00	RELAY			
RY301	1-515-473-00	RELAY			

ELECTRICAL PARTS

Ref No.	Part No.	Description
S301	1-554-822-00	SWITCH, PUSH (3 KEY)(TAPE SELECT)
S302	1-554-821-00	SWITCH, PUSH (2 KEY)(DOLBY NR)
S701	1-554-303-00	SWITCH, KEY BOARD (STOP)
S702	1-554-303-00	SWITCH, KEY BOARD (REW)
S703	1-554-303-00	SWITCH, KEY BOARD (FF)
S704	1-554-303-00	SWITCH, KEY BOARD (FWD)
S707	1-554-303-00	SWITCH, KEY BOARD (REC)
S708	1-554-303-00	SWITCH, KEY BOARD (PAUSE)
S709	1-554-303-00	SWITCH, KEY BOARD (REC MUTE)
S710	1-554-422-00	SWITCH, PUSH (1 KEY)(DOOR)
S711	1-554-422-00	SWITCH, PUSH (1 KEY)(ERASURE PREVENTION)
S901⚠	1-553-318-00	SWITCH, PUSH (AC POWER)(1 KEY)
SPK101	1-235-186-00	ENCAPSULATED COMPONENT
SPK201	1-235-186-00	ENCAPSULATED COMPONENT
T301	1-433-267-00	TRANSFORMER, OSCILLATOR
T901⚠	1-447-356-00	(FX310:US,Canadian,FX311)... TRANSFORMER, POWER
T901⚠	1-447-357-00	(FX310:E).....TRANSFORMER, POWER
T901⚠	1-447-358-00	(FX310:AEP,UK,G-AEP)..TRANSFORMER, POWER
⚠VS901	1-526-576-51	(FX310:E)...SELECTOR, POWER VOLTAGE

NOTE:
- The mechanical parts with no reference number in the exploded views are not supplied.
- Items marked " ♠ " are not stocked since they are seldom required for routine service. Some delay should be anticipated when ordering these items.
- Due to standardization, parts with part numbers (Δ-ΔΔΔ-ΔΔΔ-XX or Δ-ΔΔΔΔ-ΔΔΔ-X) may be different from those used in the set.
- If there are two or more same circuits in a set such as a stereophonic machine, only typical circuit parts may be indicated and capacitors and resistors in other same circuits may be omitted.

CAPACITORS:
- All capacitors are in μF. Common capacitors are omitted. Refer to the following lists for their part numbers. MF:μF, PF:μμF.

COILS
- MMH : mH, UH : μH

SEMICONDUCTORS
In each case, U : μ, for example:
UA···: μA···, UPA···: μPA···, UPC···: μPC, UPD···: μPD···

The components identified by shading and mark ⚠ are critical for safety. Replace only with part number specified.

Les composants identifiés par une trame et une marque ⚠ sont critiques pour la sécurité. Ne les remplacer que par une pièce portant le numéro spécifié.